Dist	COUNTY	ROUTE	POST MILES TOTAL PROJECT	SHEET No.	TOTAL SHEETS
03	ED	50	16.4/16.8	1	45

STATE OF CALIFORNIA
DEPARTMENT OF TRANSPORTATION

PROJECT PLANS FOR CONSTRUCTION ON
STATE HIGHWAY
IN EL DORADO COUNTY
IN PLACERVILLE
FROM 0.6MI EAST OF THE PLACERVILLE DRIVE OVERCROSSING TO 0.2MI EAST OF THE RAY LAWYER DRIVE OVERCROSSING

TO BE SUPPLEMENTED BY STANDARD PLANS DATED 2018

WESTERN PLACERVILLE INTERCHANGES PROJECT
PHASE 2.2

LOCATION MAP

INDEX OF PLANS

SHEET No.	DESCRIPTION
1	TITLE AND LOCATION
2–4	TYPICAL CROSS SECTIONS
5	PROJECT CONTROL
6–7	LAYOUTS
8	PROFILE AND SUPERELEVATION DIAGRAM
9–11	CONSTRUCTION DETAILS
12–13	WATER POLLUTION CONTROL PLANS
14–16	EROSION CONTROL PLANS, QUANTITIES, AND LEGEND
17–18	CONTOUR GRADING
19–24	DRAINAGE PLANS, PROFILES, DETAILS, AND QUANTITIES
25	CONSTRUCTION AREA SIGN PLAN
26–27	TRAFFIC HANDLING PLANS AND QUANTITIES
28–32	PAVEMENT DELINEATION AND SIGNS, SIGN DETAILS, AND QUANTITIES
33	SUMMARY OF QUANTITIES
34	INDEX OF ELECTRICAL SYSTEMS, PLANS, NOTES, LEGEND, AND ABBREVIATIONS
35	RAMP METERING SYSTEM
36–37	MODIFYING LIGHTING SYSTEMS
38–39	MODIFYING SIGNAL AND LIGHTING SYSTEMS
40–44	ELECTRICAL SYSTEMS DETAILS
45	ELECTRICAL SYSTEMS QUANTITIES

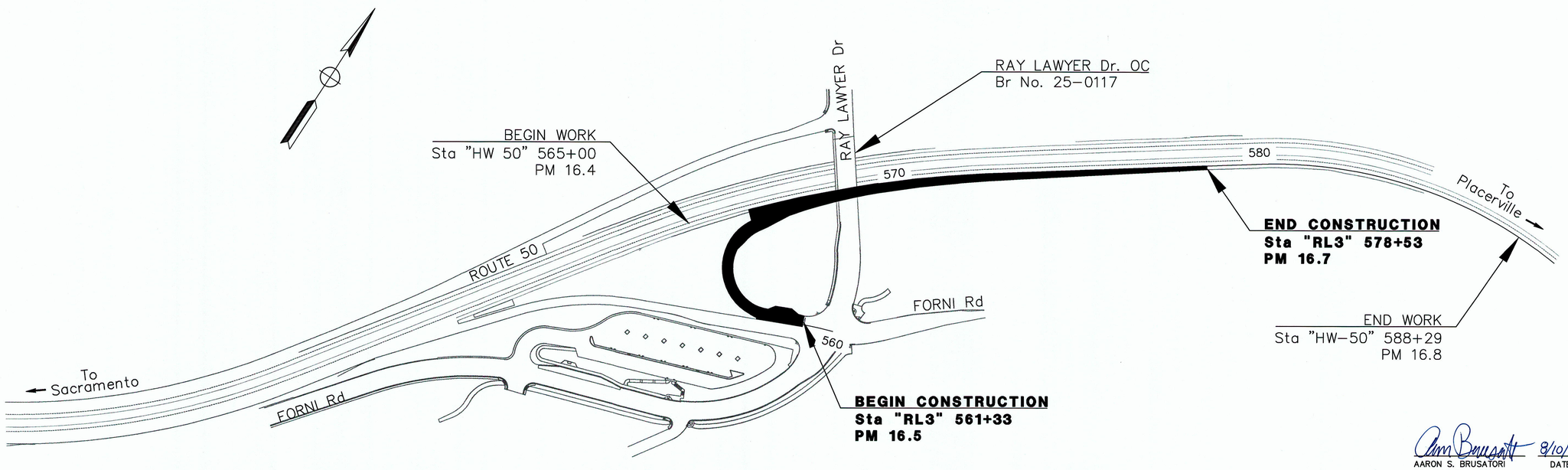

NO SCALE

APPROVED BY:

REBECCA NEVES
CITY ENGINEER
CITY OF PLACERVILLE
8/10/20
DATE

AARON S. BRUSATORI
PROJECT ENGINEER
REGISTERED CIVIL ENGINEER
8/10/20
DATE

REGISTERED PROFESSIONAL ENGINEER
AARON S. BRUSATORI
No. 64384
Exp. 6/30/21
CIVIL
STATE OF CALIFORNIA

AUGUST 31, 2020
PLANS APPROVAL DATE

THE STATE OF CALIFORNIA OR ITS OFFICERS OR AGENTS SHALL NOT BE RESPONSIBLE FOR THE ACCURACY OR COMPLETENESS OF SCANNED COPIES OF THIS PLAN SHEET.

R.E.Y. ENGINEERS, INC.
905 SUTTER ST, SUITE 200
FOLSOM, CA 95630

CITY OF PLACERVILLE
ENGINEERING DEPARTMENT
3101 CENTER ST
PLACERVILLE, CA 95667

CONTRACT No. 03–37282

APPROVED AS TO IMPACT ON STATE FACILITIES AND CONFORMANCE WITH APPLICABLE STATE STANDARDS AND PRACTICES AND THAT TECHNICAL OVERSIGHT WAS PERFORMED.

CONSULTANT DESIGN ENGINEER	CALTRANS DESIGN OVERSIGHT APPROVAL	REGISTRATION No.	LICENSE Exp DATE	DATE SIGNED
AARON S. BRUSATORI	SCOTT W. MANN, PE *Scott W Mann*	C72005	6-30-2022	9-3-2020

THE CONTRACTOR SHALL POSSESS THE CLASS (OR CLASSES) OF LICENSE AS SPECIFIED IN THE "NOTICE TO BIDDERS."

DATE PLOTTED = 10-Aug-20
TIME PLOTTED = 13:54
LAST REVISION

Dist	COUNTY	ROUTE	POST MILES TOTAL PROJECT	SHEET No.	TOTAL SHEETS
03	ED	50	16.4/16.8	2	45

REGISTERED CIVIL ENGINEER — DATE: 8-07-20

AUGUST 31, 2020
PLANS APPROVAL DATE

REGISTERED PROFESSIONAL ENGINEER — AARON BRUSATORI — No. 64384 — Exp. 6/30/21 — CIVIL — STATE OF CALIFORNIA

THE STATE OF CALIFORNIA OR ITS OFFICERS OR AGENTS SHALL NOT BE RESPONSIBLE FOR THE ACCURACY OR COMPLETENESS OF SCANNED COPIES OF THIS PLAN SHEET.

R.E.Y. ENGINEERS
905 SUTTER STREET, SUITE 200
FOLSOM, CA 95630

CITY OF PLACERVILLE
ENGINEERING DEPARTMENT
3101 CENTER STREET
PLACERVILLE, CA 95667

NOTE:

1. DIMENSIONS OF THE PAVEMENT STRUCTURES (STRUCTURAL SECTIONS) ARE SUBJECT TO TOLERANCES SPECIFIED IN THE STANDARD SPECIFICATIONS.
2. SUPERELEVATIONS ARE SHOWN ON PROFILE AND SUPERELEVATION DIAGRAMS.
3. LOCATION AND TYPES OF DIKES AND MIDWEST GUARDRAIL SYSTEMS ARE SHOWN ON LAYOUTS.
4. FOR CURB DETAILS, SEE STANDARD PLANS.

DESIGN DESIGNATION

ADT	3,400	D	100%
AADT	3,400	T	2%
DHV	520	V	mph
ESAL	114,320	TI_{20}	8.0

PAVEMENT CLIMATE REGION
LOW MOUNTAIN

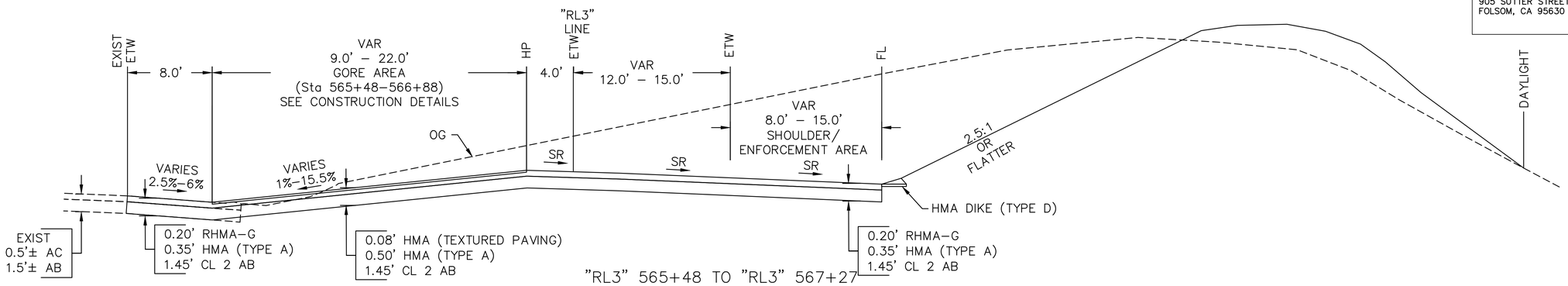

"RL3" 565+48 TO "RL3" 567+27

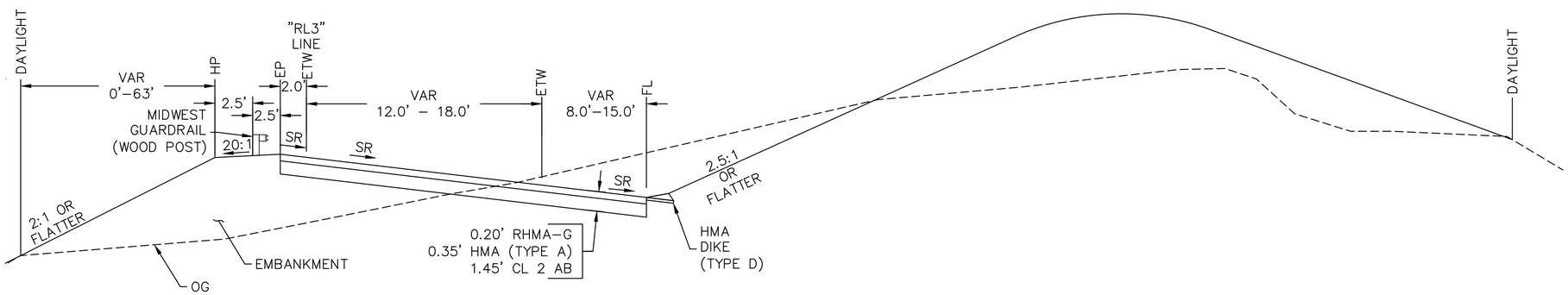

"RL3" 562+60 TO "RL3" 565+48

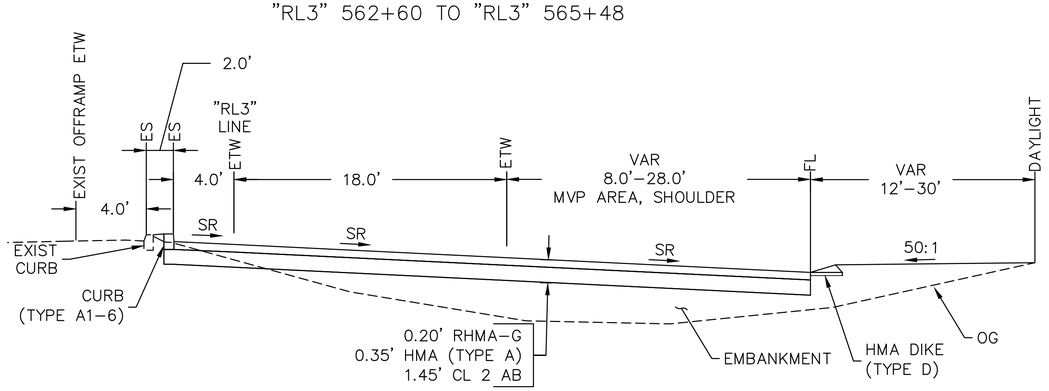

"RL3" 561+33 TO "RL3" 562+60

ON RAMP

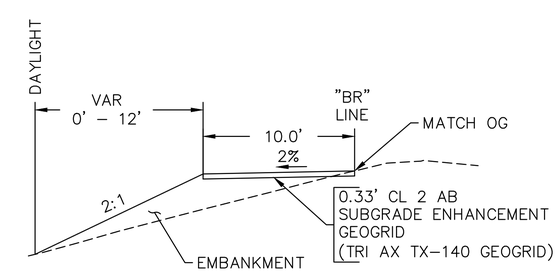

"BR" 1+04 TO "BR" 2+58

"BR" LINE

TYPICAL CROSS SECTIONS

NO SCALE

X-1

STATE OF CALIFORNIA – DEPARTMENT OF TRANSPORTATION

CONSULTANT FUNCTIONAL SUPERVISOR: AARON BRUSATORI, PE

CALCULATED-DESIGNED BY: VERONICA GARCIA-MCGREW — CHECKED BY: AARON S. BRUSATORI

REVISED BY — DATE REVISED

LAST REVISION — DATE PLOTTED => 10/14/2020 TIME PLOTTED => 11:27 AM

Dist	COUNTY	ROUTE	POST MILES TOTAL PROJECT	SHEET No.	TOTAL SHEETS
03	ED	50	16.4/16.8	3	45

REGISTERED CIVIL ENGINEER — DATE 8-07-20

AUGUST 31, 2020
PLANS APPROVAL DATE

REGISTERED PROFESSIONAL ENGINEER — AARON BRUSATORI — No. 64384 — Exp. 6/30/21 — CIVIL — STATE OF CALIFORNIA

THE STATE OF CALIFORNIA OR ITS OFFICERS OR AGENTS SHALL NOT BE RESPONSIBLE FOR THE ACCURACY OR COMPLETENESS OF SCANNED COPIES OF THIS PLAN SHEET.

R.E.Y. ENGINEERS
905 SUTTER STREET, SUITE 200
FOLSOM, CA 95630

CITY OF PLACERVILLE
ENGINEERING DEPARTMENT
3101 CENTER STREET
PLACERVILLE, CA 95667

NOTE:
FROM "RL3" STATION 568+00 TO STATION 572+53, MATCH THE EXISTING VERTICAL CURVE GEOMETRY OF "HW 50" LINE.

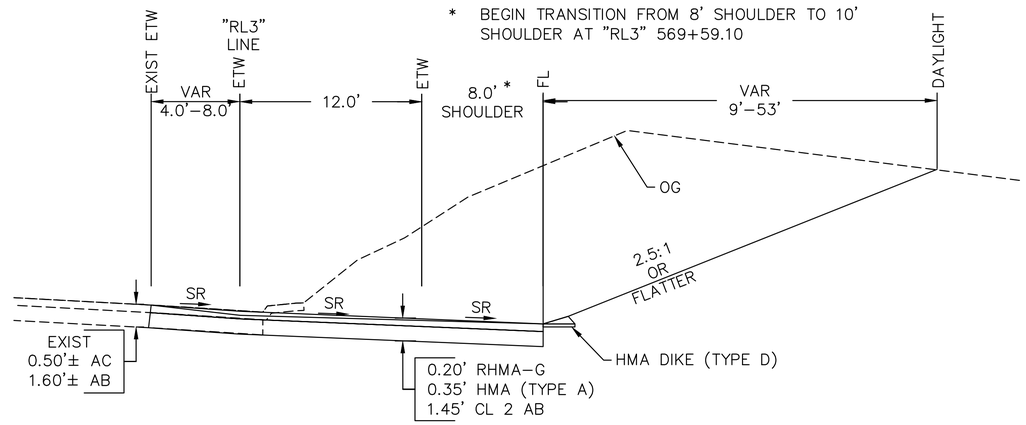

"RL3" 568+88 TO "RL3" 570+02

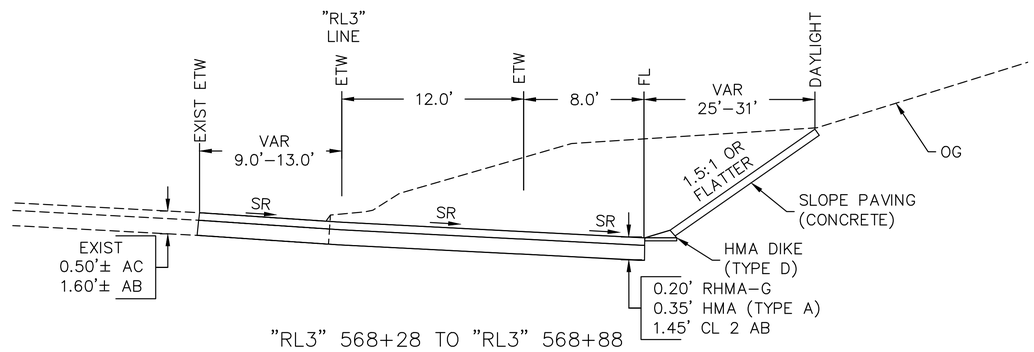

"RL3" 568+28 TO "RL3" 568+88

NOTE:
FROM STATION 568+00 TO END OF ONRAMP, MATCH THE EXISTING VERTICAL CURVE GEOMETRY OF HIGHWAY 50.

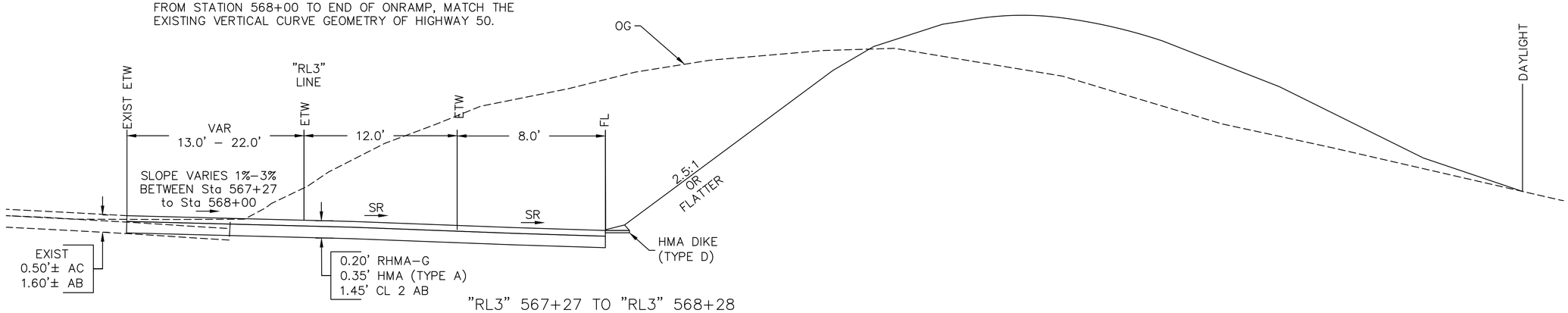

"RL3" 567+27 TO "RL3" 568+28

ROUTE 50

TYPICAL CROSS SECTIONS

NO SCALE

X-2

STATE OF CALIFORNIA – DEPARTMENT OF TRANSPORTATION
Caltrans

CONSULTANT FUNCTIONAL SUPERVISOR: AARON BRUSATORI, PE
CALCULATED-DESIGNED BY: VERONICA GARCIA-MCGREW
CHECKED BY: AARON S. BRUSATORI
REVISED BY
DATE REVISED

LAST REVISION — DATE PLOTTED => 10/14/2020 TIME PLOTTED => 11:27 AM

BORDER LAST REVISED 7/2/2010
USERNAME => VGMCGREW
CAD FILE => 6884.009 TYPICAL SECTIONS.DWG
RELATIVE BORDER SCALE IS IN INCHES 0 1 2 3
UNIT
PROJECT NUMBER & PHASE 03190001521

Dist	COUNTY	ROUTE	POST MILES TOTAL PROJECT	SHEET No.	TOTAL SHEETS
03	ED	50	16.4/16.8	4	45

REGISTERED CIVIL ENGINEER — DATE 8-07-20

AUGUST 31, 2020
PLANS APPROVAL DATE

REGISTERED PROFESSIONAL ENGINEER — AARON BRUSATORI — No. 64384 — Exp. 6/30/21 — CIVIL — STATE OF CALIFORNIA

THE STATE OF CALIFORNIA OR ITS OFFICERS OR AGENTS SHALL NOT BE RESPONSIBLE FOR THE ACCURACY OR COMPLETENESS OF SCANNED COPIES OF THIS PLAN SHEET.

R.E.Y. ENGINEERS
905 SUTTER STREET, SUITE 200
FOLSOM, CA 95630

CITY OF PLACERVILLE
ENGINEERING DEPARTMENT
3101 CENTER STREET
PLACERVILLE, CA 95667

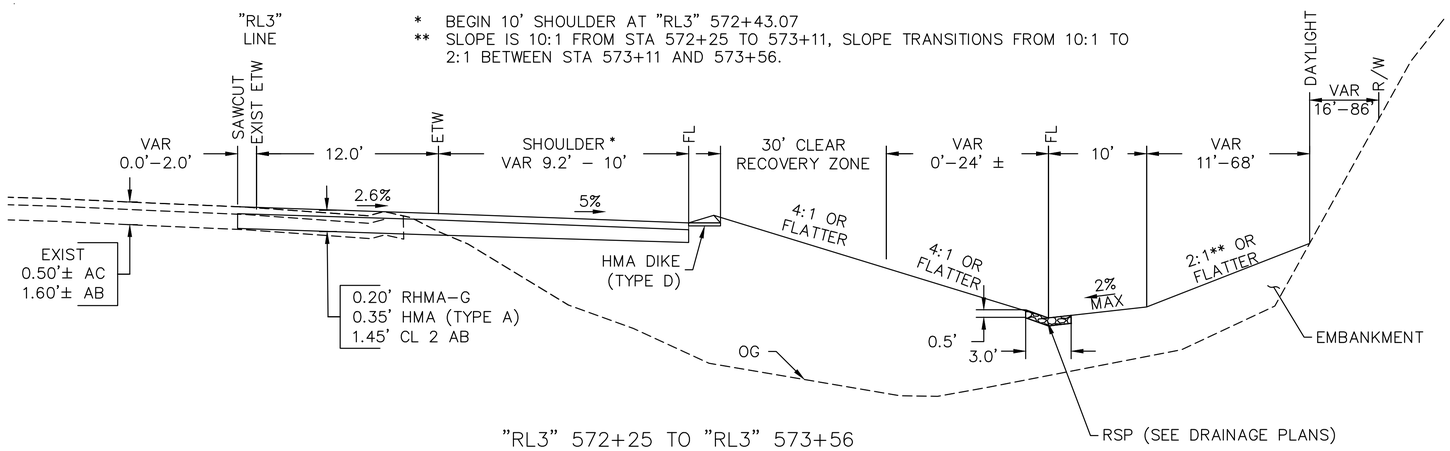

"RL3" 572+25 TO "RL3" 573+56

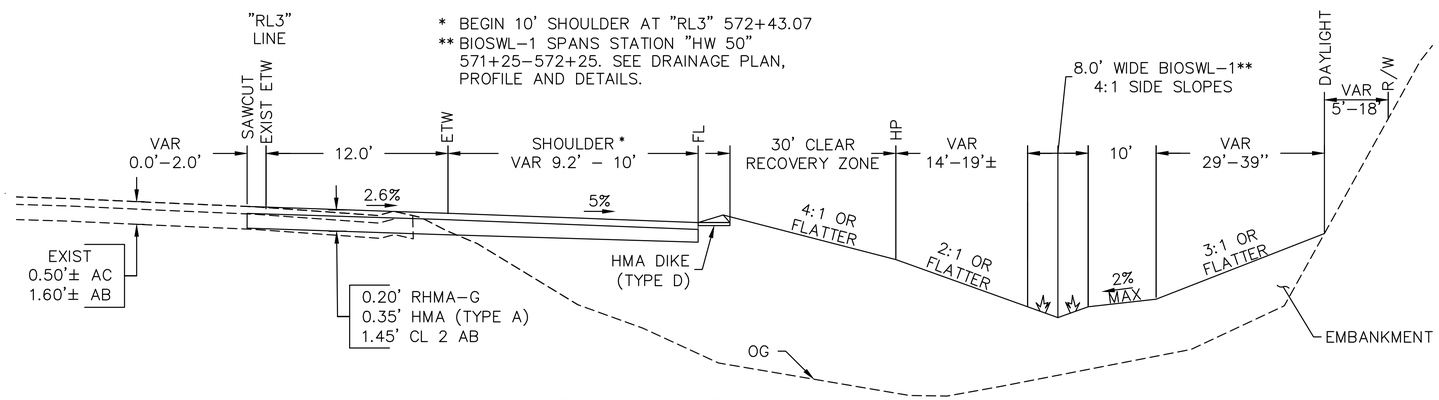

"RL3" 571+20 TO "RL3" 572+25

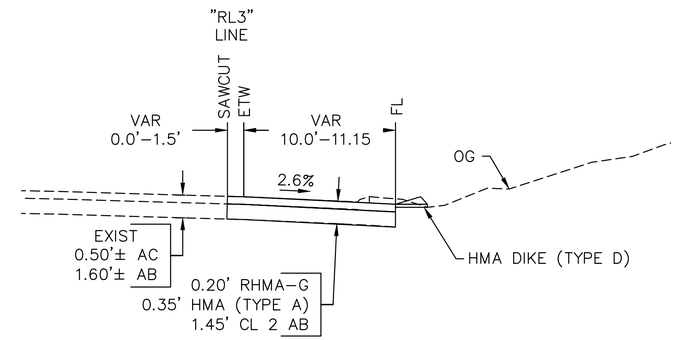

"RL3" 577+70 TO "RL3" 578+54

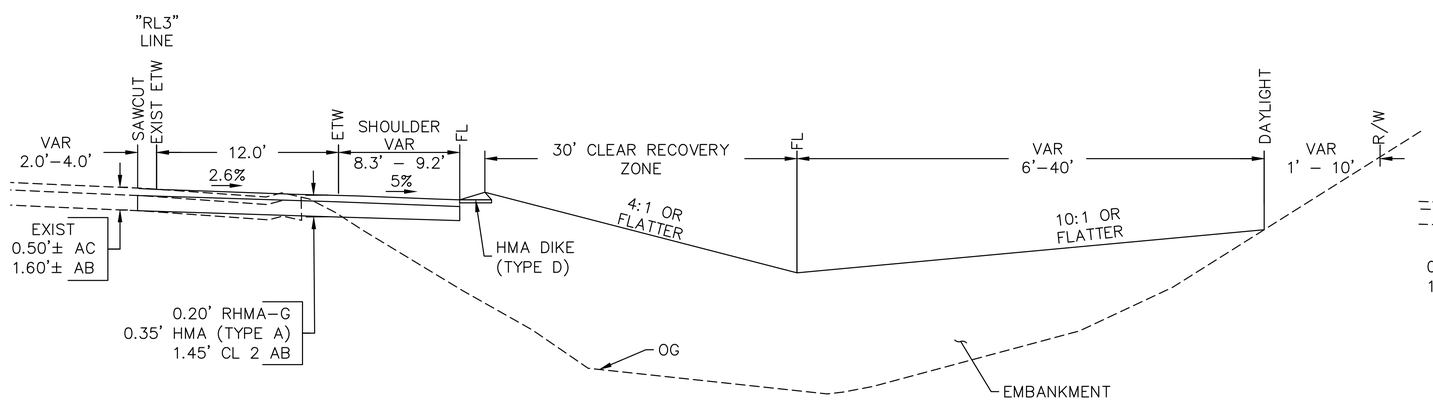

"RL3" 570+02 TO "RL3" 571+20

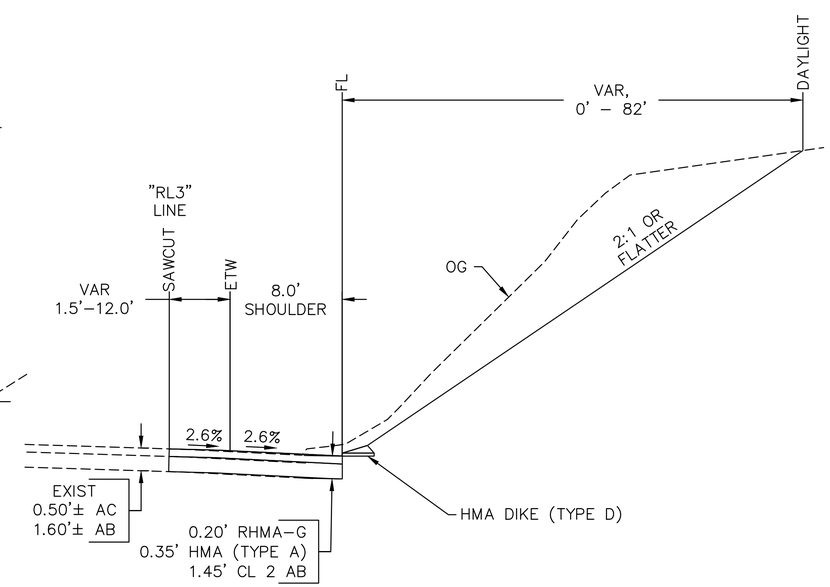

"RL3" 573+56 TO "RL3" 577+70

ROUTE 50

TYPICAL CROSS SECTIONS

NO SCALE

X-3

STATE OF CALIFORNIA – DEPARTMENT OF TRANSPORTATION
Caltrans

CONSULTANT FUNCTIONAL SUPERVISOR: AARON BRUSATORI, PE

VERONICA GARCIA-MCGREW — AARON S. BRUSATORI

CALCULATED-DESIGNED BY — CHECKED BY

REVISED BY — DATE REVISED

LAST REVISION — DATE PLOTTED => 10/14/2020 TIME PLOTTED => 11:27 AM

BORDER LAST REVISED 7/2/2010 | USERNAME => VGMCGREW CAD FILE => 6884.009 TYPICAL SECTIONS.DWG | RELATIVE BORDER SCALE IS IN INCHES 0 1 2 3 | UNIT | PROJECT NUMBER & PHASE 03190001521

Dist	COUNTY	ROUTE	POST MILES TOTAL PROJECT	SHEET No.	TOTAL SHEETS
03	ED	50	16.4/16.8	5	45

REGISTERED CIVIL ENGINEER — DATE: 8-07-20

AUGUST 31, 2020
PLANS APPROVAL DATE

REGISTERED PROFESSIONAL ENGINEER — AARON BRUSATORI — No. 64384 — Exp. 6/30/21 — CIVIL — STATE OF CALIFORNIA

THE STATE OF CALIFORNIA OR ITS OFFICERS OR AGENTS SHALL NOT BE RESPONSIBLE FOR THE ACCURACY OR COMPLETENESS OF SCANNED COPIES OF THIS PLAN SHEET.

R.E.Y. ENGINEERS
905 SUTTER STREET, SUITE 200
FOLSOM, CA 95630

CITY OF PLACERVILLE
ENGINEERING DEPARTMENT
3101 CENTER STREET
PLACERVILLE, CA 95667

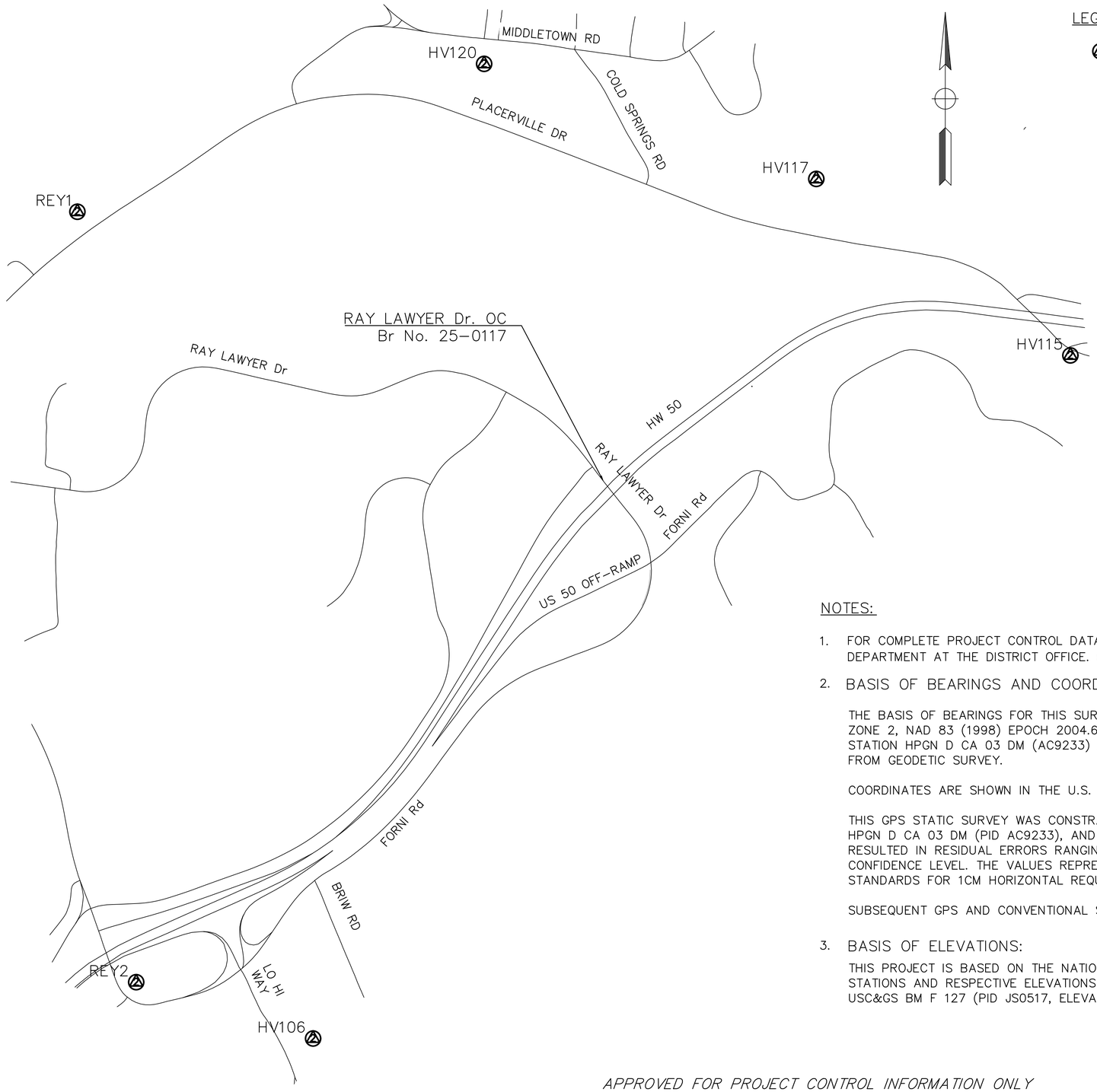

LEGEND:

SURVEY CONTROL POINT

CONTROL FOR DESIGN AND CONSTRUCTION

NO	ORDER	EASTING	NORTHING	ELEV	DESCRIPTION
REY1	2CM	6894295.577	2030517.927	1662.44	SET 5/8"REBAR WITH REY CONTROL CAP
REY2	2CM	6894599.976	2026509.404	1773.82	SET 5/8"REBAR WITH REY CONTROL CAP
HV106	2CM	6895520.376	2026216.343	1812.43	SET 5/8"REBAR WITH REY CONTROL CAP
HV115	2CM	6899458.931	2029770.316	1772.72	SET 5/8"REBAR WITH REY CONTROL CAP
HV117	2CM	6898137.499	2030688.606	1741.01	SET BERNSTEN SPIKE
HV120	2CM	6896410.400	2031287.268	1688.01	SET BERNSTEN SPIKE

NOTES:

1. FOR COMPLETE PROJECT CONTROL DATA, SEE THE SURVEY RECORDS FILE IN THE SURVEYS DEPARTMENT AT THE DISTRICT OFFICE. (SEE EA 37280, ASC 0920-15)
2. BASIS OF BEARINGS AND COORDINATES:

   THE BASIS OF BEARINGS FOR THIS SURVEY IS THE CALIFORNIA COORDINATE SYSTEM (CCS), ZONE 2, NAD 83 (1998) EPOCH 2004.69 AS DETERMINED LOCALLY BY A LINE BETWEEN STATION HPGN D CA 03 DM (AC9233) AND STATION HPGN D CA 03 EM (AC9231), BEING N 9^50'15"E, FROM GEODETIC SURVEY.

   COORDINATES ARE SHOWN IN THE U.S. SURVEY FOOT (1200/3937 METER)

   THIS GPS STATIC SURVEY WAS CONSTRAINED TO NSRS STATIONS: AIRPORT (PID JS4060), HPGN D CA 03 DM (PID AC9233), AND HPGN D CA 03 EM (PID AC9231) PER NGS REFERENCE SYSTEM AND RESULTED IN RESIDUAL ERRORS RANGING FROM 5.2MM TO 7.0MM HORIZONTALLY AT THE 95% CONFIDENCE LEVEL. THE VALUES REPRESENTED IN THIS SURVEY MEET THE ABOVE-REFERENCED STANDARDS FOR 1CM HORIZONTAL REQUIREMENTS.

   SUBSEQUENT GPS AND CONVENTIONAL SURVEYS ESTABLISHED THE LISTED 2CM ORDER STATIONS.
3. BASIS OF ELEVATIONS:

   THIS PROJECT IS BASED ON THE NATIONAL GEODETIC VERTICAL DATUM OF 1929 (NGVD 29). STATIONS AND RESPECTIVE ELEVATIONS CONSTRAINED TO ARE: USC&GS BM F 127 (PID JS0517, ELEVATION 1677.65').

APPROVED FOR PROJECT CONTROL INFORMATION ONLY

PROJECT CONTROL

NO SCLAE

PC-1

STATE OF CALIFORNIA – DEPARTMENT OF TRANSPORTATION — Caltrans

CONSULTANT FUNCTIONAL SUPERVISOR: AARON BRUSATORI, PE

CALCULATED-DESIGNED BY: VERONICA GARCIA-MCGREW — CHECKED BY: AARON S. BRUSATORI

REVISED BY — DATE REVISED

LAST REVISION — DATE PLOTTED => 10/14/2020 — TIME PLOTTED => 11:28 AM

Dist	COUNTY	ROUTE	POST MILES TOTAL PROJECT	SHEET No.	TOTAL SHEETS
03	ED	50	16.4/16.8	6	45

REGISTERED CIVIL ENGINEER — DATE 8-07-20

AUGUST 31, 2020
PLANS APPROVAL DATE

REGISTERED PROFESSIONAL ENGINEER — AARON BRUSATORI — No. 64384 — Exp. 6/30/21 — CIVIL — STATE OF CALIFORNIA

THE STATE OF CALIFORNIA OR ITS OFFICERS OR AGENTS SHALL NOT BE RESPONSIBLE FOR THE ACCURACY OR COMPLETENESS OF SCANNED COPIES OF THIS PLAN SHEET.

R.E.Y. ENGINEERS
905 SUTTER STREET, SUITE 200
FOLSOM, CA 95630

CITY OF PLACERVILLE
ENGINEERING DEPARTMENT
3101 CENTER STREET
PLACERVILLE, CA 95667

NOTE:

1. FOR ACCURATE RIGHT OF WAY DATA, CONTACT RIGHT OF WAY ENGINEERING AT THE DISTRICT OFFICE.
2. STATION–OFFSET CALLOUTS ON LAYOUT SHEETS REFER TO "RL3" LINE ONLY.

LEGEND:

- REMOVE TREE
- HMA (TEXTURED PAVING)
- SLOPE PAVING (CONCRETE)

CURVE TABLE

CURVE	RADIUS	DELTA	TANGENT	LENGTH
①	1020.00	5°43'04"	50.94	101.792
②	140.00	147°33'44"	481.29	360.56
③	1467.00	14°10'00"	182.29	362.72
④	3000.00	6°42'21"	175.76	351.12
⑥	2999.56	19°41'00"	520.36	1030.46
⑧	754.00	8°29'03"	55.93	111.65
⑨	523.91	7°25'56"	34.03	67.96
⑩	93.48	36°51'49"	31.16	60.15

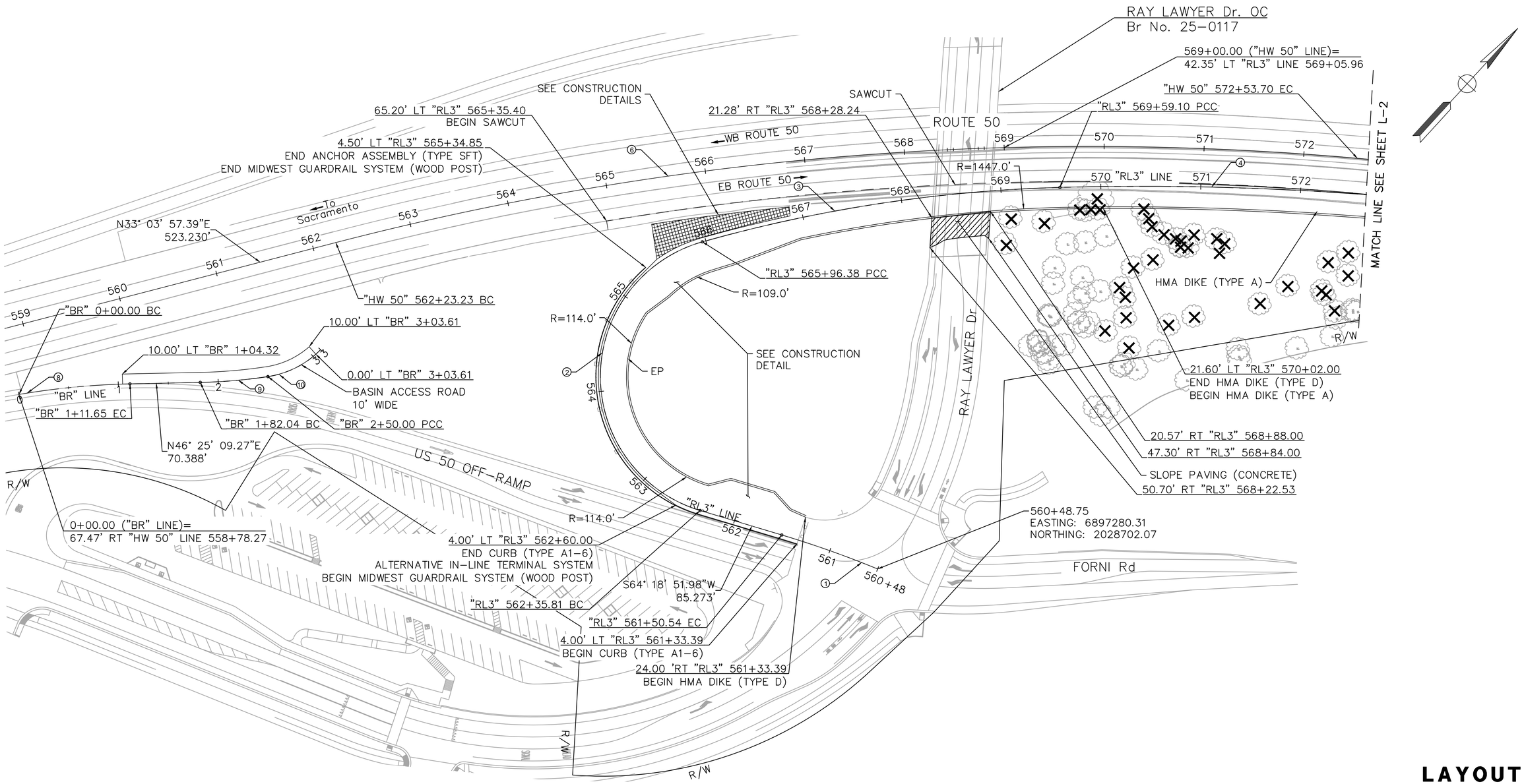

LAYOUT

SCALE: 1" = 50'

L-1

REVISED BY	DATE REVISED
VERONICA GARCIA–MCGREW	AARON S. BRUSATORI

CALCULATED–DESIGNED BY	CHECKED BY

CONSULTANT FUNCTIONAL SUPERVISOR — AARON BRUSATORI, PE

STATE OF CALIFORNIA – DEPARTMENT OF TRANSPORTATION — Caltrans

LAST REVISION — DATE PLOTTED => 10/14/2020 TIME PLOTTED => 11:28 AM

BORDER LAST REVISED 7/2/2010 | USERNAME => VGMCGREW CAD FILE => 6884.009 LAYOUTS.DWG | RELATIVE BORDER SCALE IS IN INCHES 0 1 2 3 | UNIT | PROJECT NUMBER & PHASE 03190001521

Dist	COUNTY	ROUTE	POST MILES TOTAL PROJECT	SHEET No.	TOTAL SHEETS
03	ED	50	16.4/16.8	8	45

REGISTERED CIVIL ENGINEER — DATE 8-07-20

AUGUST 31, 2020
PLANS APPROVAL DATE

REGISTERED PROFESSIONAL ENGINEER — AARON BRUSATORI — No. 64384 — Exp. 6/30/21 — CIVIL — STATE OF CALIFORNIA

THE STATE OF CALIFORNIA OR ITS OFFICERS OR AGENTS SHALL NOT BE RESPONSIBLE FOR THE ACCURACY OR COMPLETENESS OF SCANNED COPIES OF THIS PLAN SHEET.

R.E.Y. ENGINEERS
905 SUTTER STREET, SUITE 200
FOLSOM, CA 95630

CITY OF PLACERVILLE
ENGINEERING DEPARTMENT
3101 CENTER STREET
PLACERVILLE, CA 95667

NOTE:

ALL EXCAVATION AND EMBANKMENT QUANTITIES ARE INCLUDED ON THE SUMMARY OF QUANTITIES SHEET.

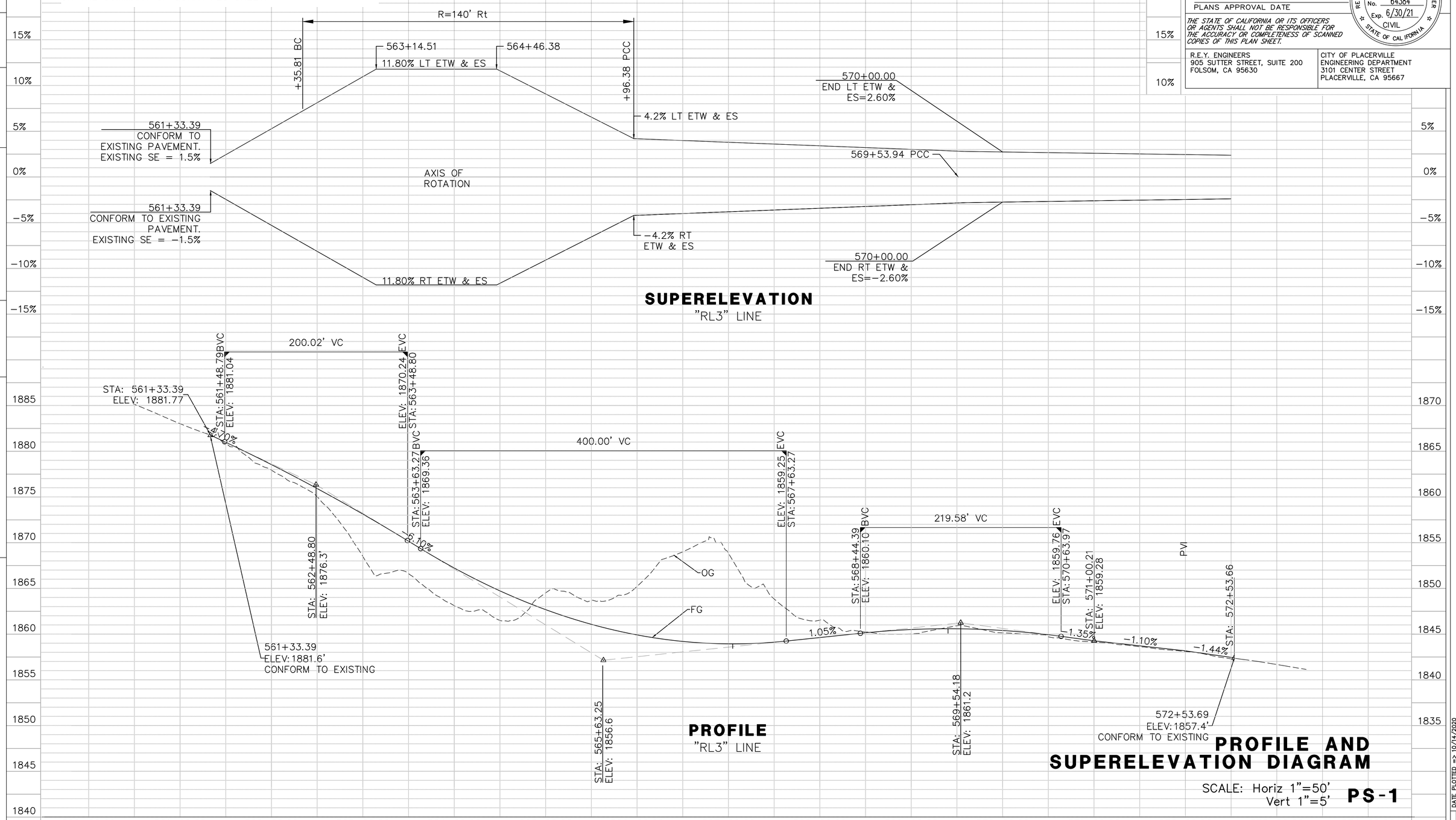

STATE OF CALIFORNIA – DEPARTMENT OF TRANSPORTATION

Caltrans

CONSULTANT FUNCTIONAL SUPERVISOR: AARON BRUSATORI, PE

CALCULATED-DESIGNED BY: VERONICA GARCIA-MCGREW

CHECKED BY: AARON S. BRUSATORI

REVISED BY | DATE REVISED

DATE PLOTTED => 10/14/2020
TIME PLOTTED => 11:28 AM

LAST REVISION

BORDER LAST REVISED 7/2/2010

USERNAME => VGMCGREW
CAD FILE => 6884.009 PROFILE AND SUPERELEVATIONS.DWG

RELATIVE BORDER SCALE IS IN INCHES 0 1 2 3

UNIT

PROJECT NUMBER & PHASE 03190001521

Dist	COUNTY	ROUTE	POST MILES TOTAL PROJECT	SHEET No.	TOTAL SHEETS
03	ED	50	16.4/16.8	7	45

REGISTERED CIVIL ENGINEER — DATE: 8-07-20

AUGUST 31, 2020
PLANS APPROVAL DATE

REGISTERED PROFESSIONAL ENGINEER — AARON BRUSATORI — No. 64384 — Exp. 6/30/21 — CIVIL — STATE OF CALIFORNIA

THE STATE OF CALIFORNIA OR ITS OFFICERS OR AGENTS SHALL NOT BE RESPONSIBLE FOR THE ACCURACY OR COMPLETENESS OF SCANNED COPIES OF THIS PLAN SHEET.

R.E.Y. ENGINEERS
905 SUTTER STREET, SUITE 200
FOLSOM, CA 95630

CITY OF PLACERVILLE
ENGINEERING DEPARTMENT
3101 CENTER STREET
PLACERVILLE, CA 95667

CURVE TABLE

CURVE	RADIUS	DELTA	TANGENT	LENGTH
5	1215.00	43°22'19"	483.16	919.73
7	1232.38	43°53'24"	496.54	944.04

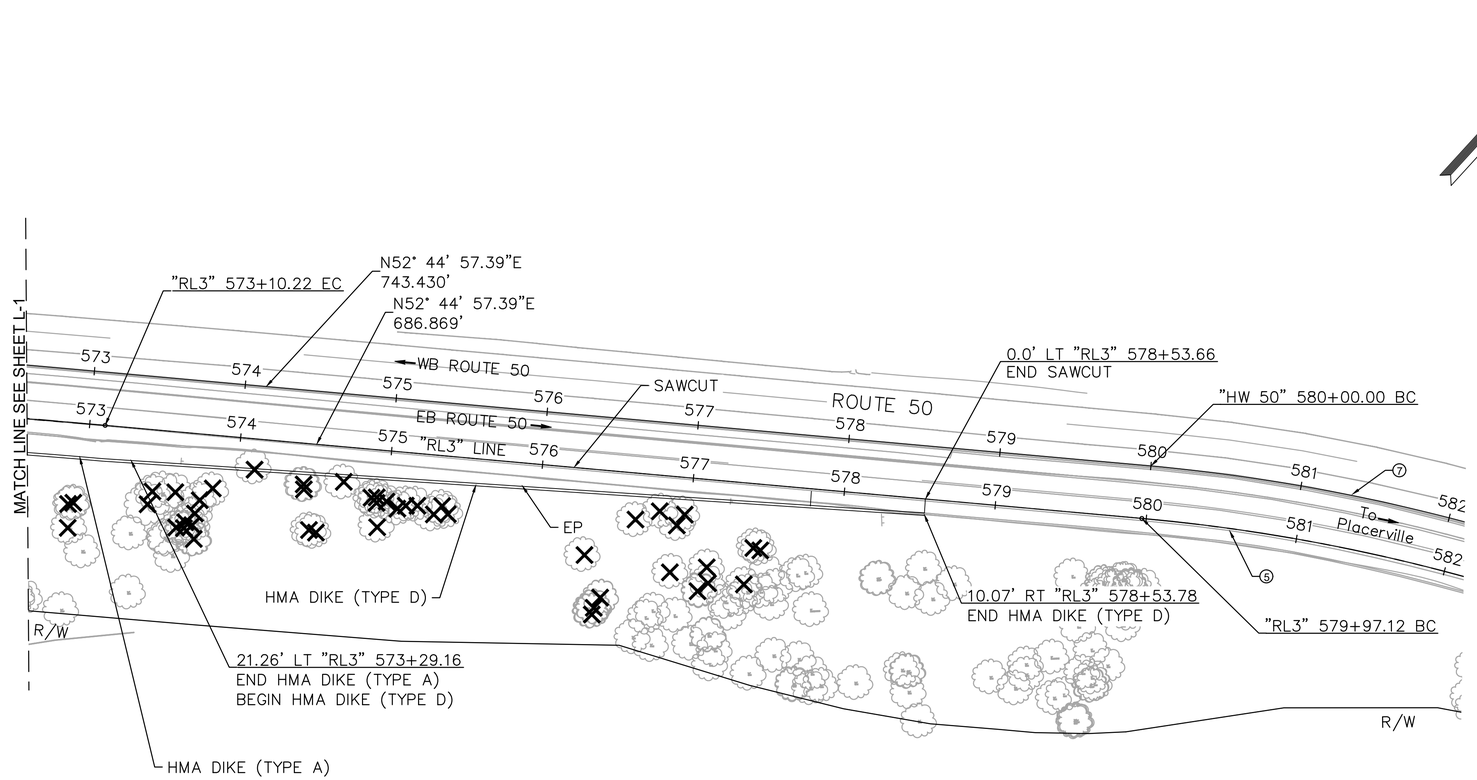

LAYOUT L-2

SCALE: 1" = 50'

STATE OF CALIFORNIA – DEPARTMENT OF TRANSPORTATION
Caltrans

CONSULTANT FUNCTIONAL SUPERVISOR: AARON BRUSATORI, PE

CALCULATED-DESIGNED BY: VERONICA GARCIA-MCGREW
CHECKED BY: AARON S. BRUSATORI

REVISED BY
DATE REVISED

LAST REVISION
DATE PLOTTED => 10/14/2020
TIME PLOTTED => 11:28 AM

Dist	COUNTY	ROUTE	POST MILES TOTAL PROJECT	SHEET No.	TOTAL SHEETS
03	ED	50	16.4/16.8	9	45

REGISTERED CIVIL ENGINEER — DATE: 8-07-20

AUGUST 31, 2020
PLANS APPROVAL DATE

REGISTERED PROFESSIONAL ENGINEER — AARON BRUSATORI — No. 64384 — Exp. 6/30/21 — CIVIL — STATE OF CALIFORNIA

THE STATE OF CALIFORNIA OR ITS OFFICERS OR AGENTS SHALL NOT BE RESPONSIBLE FOR THE ACCURACY OR COMPLETENESS OF SCANNED COPIES OF THIS PLAN SHEET.

R.E.Y. ENGINEERS
905 SUTTER STREET, SUITE 200
FOLSOM, CA 95630

CITY OF PLACERVILLE
ENGINEERING DEPARTMENT
3101 CENTER STREET
PLACERVILLE, CA 95667

LEGEND:

CONTRASTING SURFACE TREATMENT
HMA (TEXTURED PAVING)

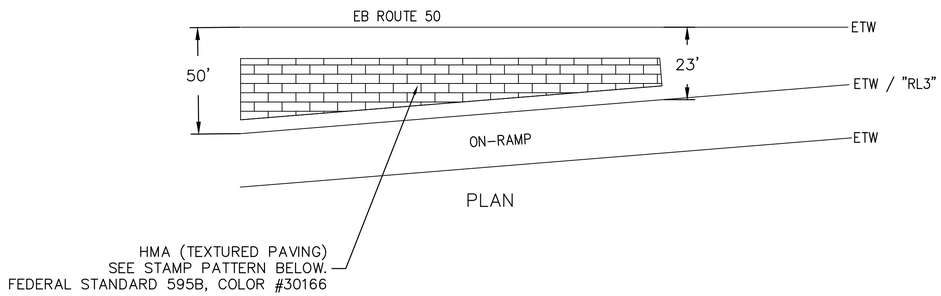

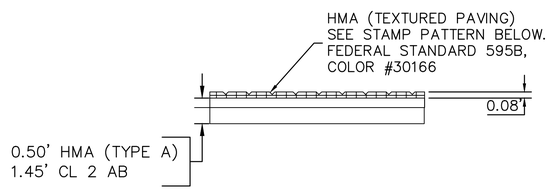

TYPICAL GORE PAVING–SECTION

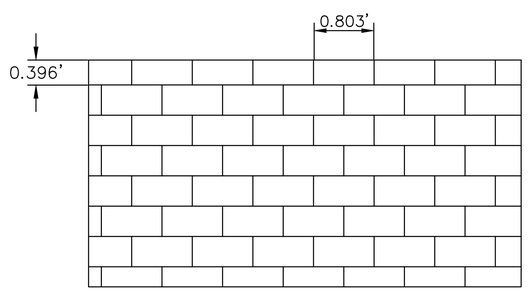

TYPICAL GORE PAVING STAMP PATTERN

GORE AREA PAVING DETAILS

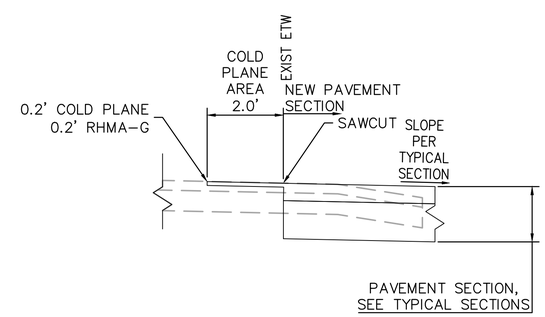

EDGE DETAIL

CONSTRUCTION DETAILS

NO SCALE

C-1

REVISED BY	DATE REVISED

VERONICA GARCIA-MCGREW — AARON S. BRUSATORI

CALCULATED-DESIGNED BY — CHECKED BY

CONSULTANT FUNCTIONAL SUPERVISOR — AARON BRUSATORI, PE

STATE OF CALIFORNIA – DEPARTMENT OF TRANSPORTATION — Caltrans

DATE PLOTTED => 10/14/2020
TIME PLOTTED => 11:29 AM

LAST REVISION

Dist	COUNTY	ROUTE	POST MILES TOTAL PROJECT	SHEET No.	TOTAL SHEETS
03	ED	50	16.4/16.8	10	45

REGISTERED CIVIL ENGINEER — DATE: 8-07-20

AUGUST 31, 2020
PLANS APPROVAL DATE

REGISTERED PROFESSIONAL ENGINEER — AARON BRUSATORI — No. 64384 — Exp. 6/30/21 — CIVIL — STATE OF CALIFORNIA

THE STATE OF CALIFORNIA OR ITS OFFICERS OR AGENTS SHALL NOT BE RESPONSIBLE FOR THE ACCURACY OR COMPLETENESS OF SCANNED COPIES OF THIS PLAN SHEET.

R.E.Y. ENGINEERS
905 SUTTER STREET, SUITE 200
FOLSOM, CA 95630

CITY OF PLACERVILLE
ENGINEERING DEPARTMENT
3101 CENTER STREET
PLACERVILLE, CA 95667

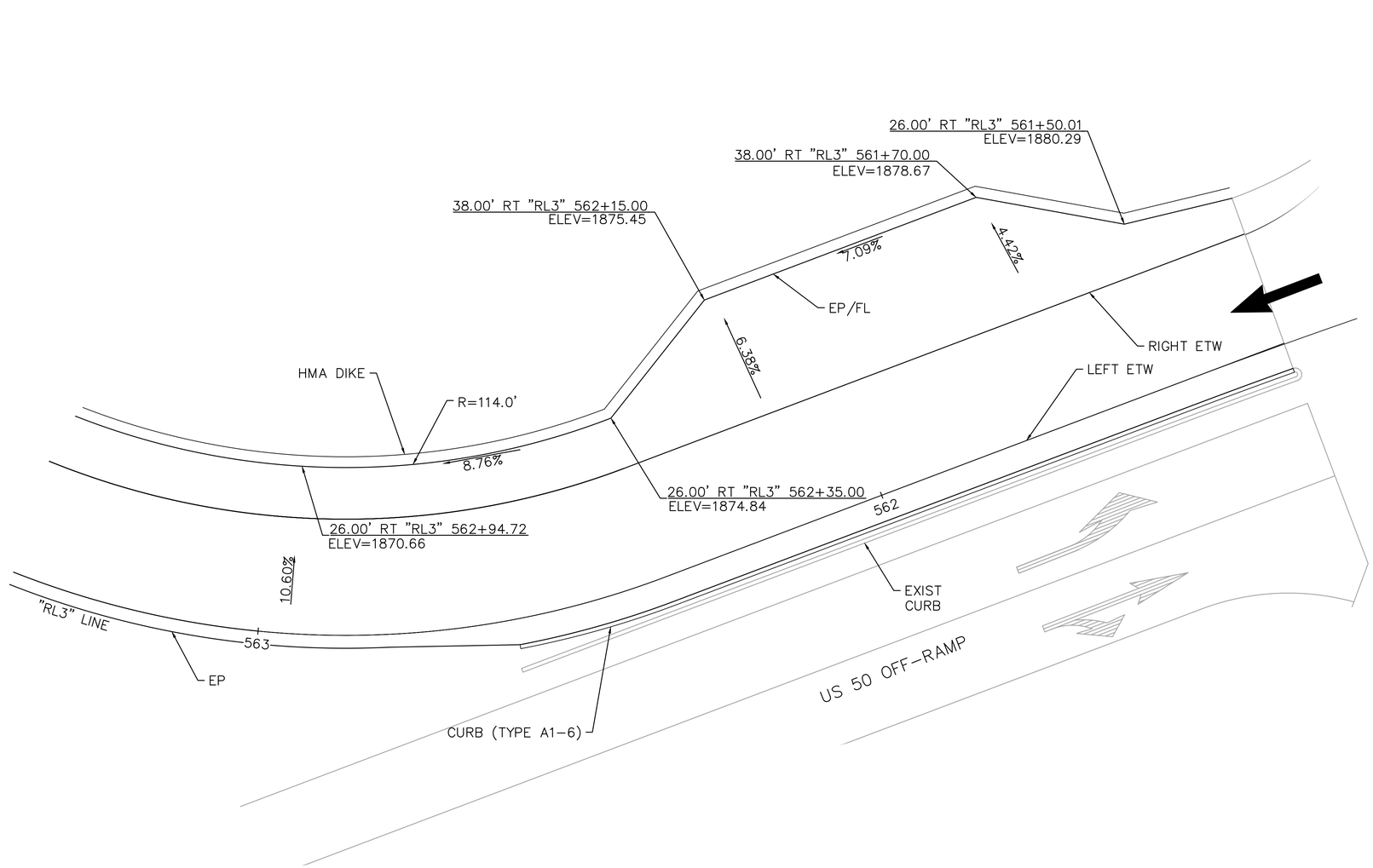

MVP AREA DETAILS

CONSTRUCTION DETAILS

SCALE: 1" = 10'

C-2

STATE OF CALIFORNIA – DEPARTMENT OF TRANSPORTATION
Caltrans

CONSULTANT FUNCTIONAL SUPERVISOR: AARON BRUSATORI, PE

CALCULATED-DESIGNED BY: VERONICA GARCIA-MCGREW
CHECKED BY: AARON S. BRUSATORI

REVISED BY
DATE REVISED

LAST REVISION
DATE PLOTTED => 10/14/2020
TIME PLOTTED => 11:29 AM

BORDER LAST REVISED 7/2/2010
USERNAME => VGMCGREW
CAD FILE => 6884.009 CONSTRUCTION DETAILS.DWG
RELATIVE BORDER SCALE IS IN INCHES 0 1 2 3
UNIT
PROJECT NUMBER & PHASE 03190001521

Dist	COUNTY	ROUTE	POST MILES TOTAL PROJECT	SHEET No.	TOTAL SHEETS
03	ED	50	16.4/16.8	11	45

REGISTERED CIVIL ENGINEER — DATE: 8-07-20

AUGUST 31, 2020
PLANS APPROVAL DATE

REGISTERED PROFESSIONAL ENGINEER — AARON BRUSATORI — No. 64384 — Exp. 6/30/21 — CIVIL — STATE OF CALIFORNIA

THE STATE OF CALIFORNIA OR ITS OFFICERS OR AGENTS SHALL NOT BE RESPONSIBLE FOR THE ACCURACY OR COMPLETENESS OF SCANNED COPIES OF THIS PLAN SHEET.

R.E.Y. ENGINEERS
905 SUTTER STREET, SUITE 200
FOLSOM, CA 95630

CITY OF PLACERVILLE
ENGINEERING DEPARTMENT
3101 CENTER STREET
PLACERVILLE, CA 95667

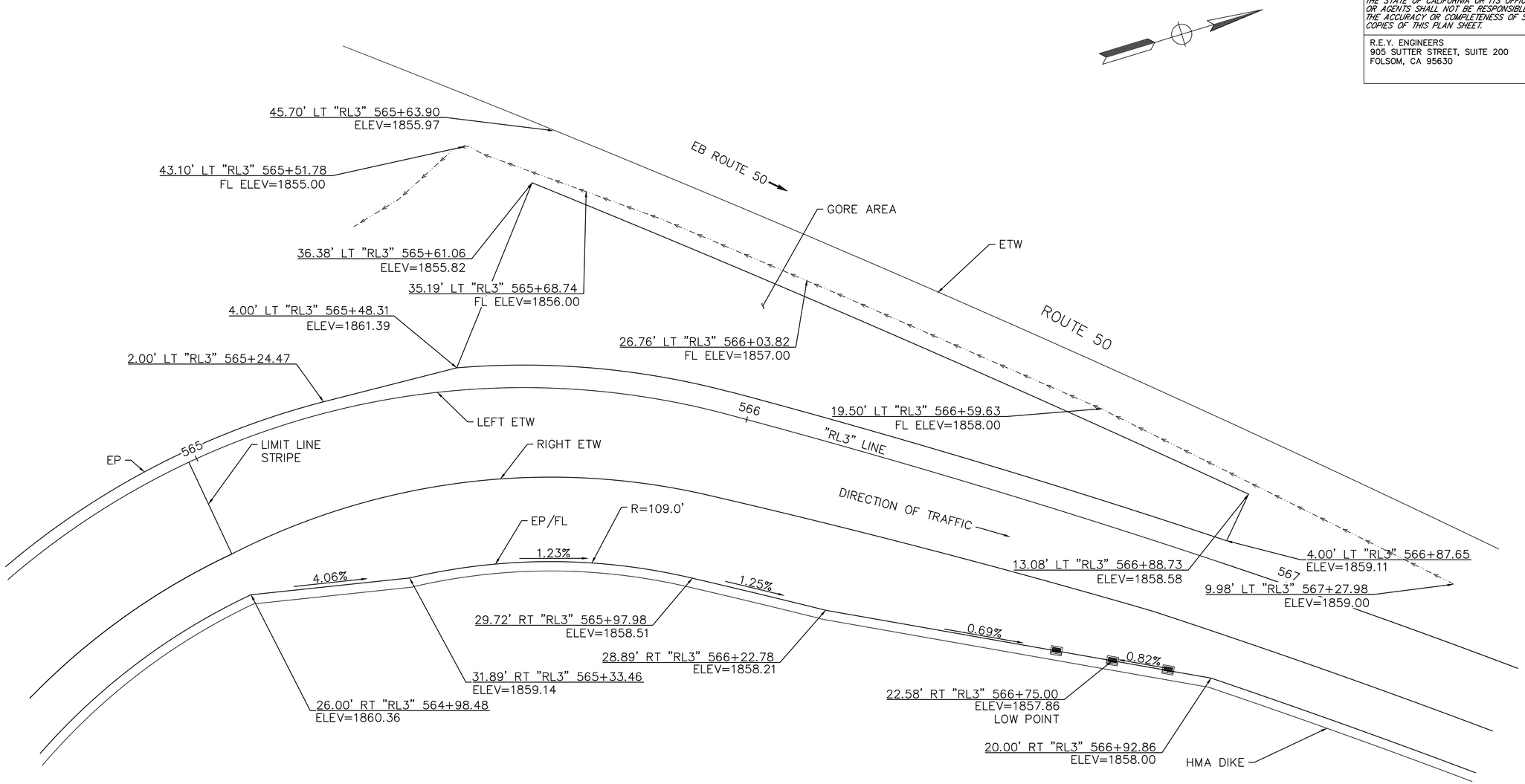

CHP ENFORCEMENT AREA AND GORE AREA DETAILS

CONSTRUCTION DETAILS

SCALE: 1" = 10'

C-3

STATE OF CALIFORNIA – DEPARTMENT OF TRANSPORTATION

Caltrans

CONSULTANT FUNCTIONAL SUPERVISOR: AARON BRUSATORI, PE

CALCULATED-DESIGNED BY: VERONICA GARCIA-MCGREW — CHECKED BY: AARON S. BRUSATORI

REVISED BY — DATE REVISED

LAST REVISION — DATE PLOTTED => 10/14/2020 TIME PLOTTED => 11:29 AM

Dist	COUNTY	ROUTE	POST MILES TOTAL PROJECT	SHEET No.	TOTAL SHEETS
03	ED	50	16.4/16.8	12	45

REGISTERED CIVIL ENGINEER — DATE: 8-07-20

AUGUST 31, 2020
PLANS APPROVAL DATE

REGISTERED PROFESSIONAL ENGINEER — AARON BRUSATORI — No. 64384 — Exp. 6/30/21 — CIVIL — STATE OF CALIFORNIA

THE STATE OF CALIFORNIA OR ITS OFFICERS OR AGENTS SHALL NOT BE RESPONSIBLE FOR THE ACCURACY OR COMPLETENESS OF SCANNED COPIES OF THIS PLAN SHEET.

R.E.Y. ENGINEERS
905 SUTTER STREET, SUITE 200
FOLSOM, CA 95630

CITY OF PLACERVILLE
ENGINEERING DEPARTMENT
3101 CENTER STREET
PLACERVILLE, CA 95667

NOTE:

1. FOR ACCURATE RIGHT OF WAY DATA, CONTACT RIGHT OF WAY ENGINEERING AT THE DISTRICT OFFICE.

LEGEND:

- TEMPORARY HYDRAULIC MULCH
- TEMPORARY CONSTRUCTION ENTRANCE
- TEMPORARY DRAINAGE INLET PROTECTION
- F_ _ F/C....C GRADING LIMITS

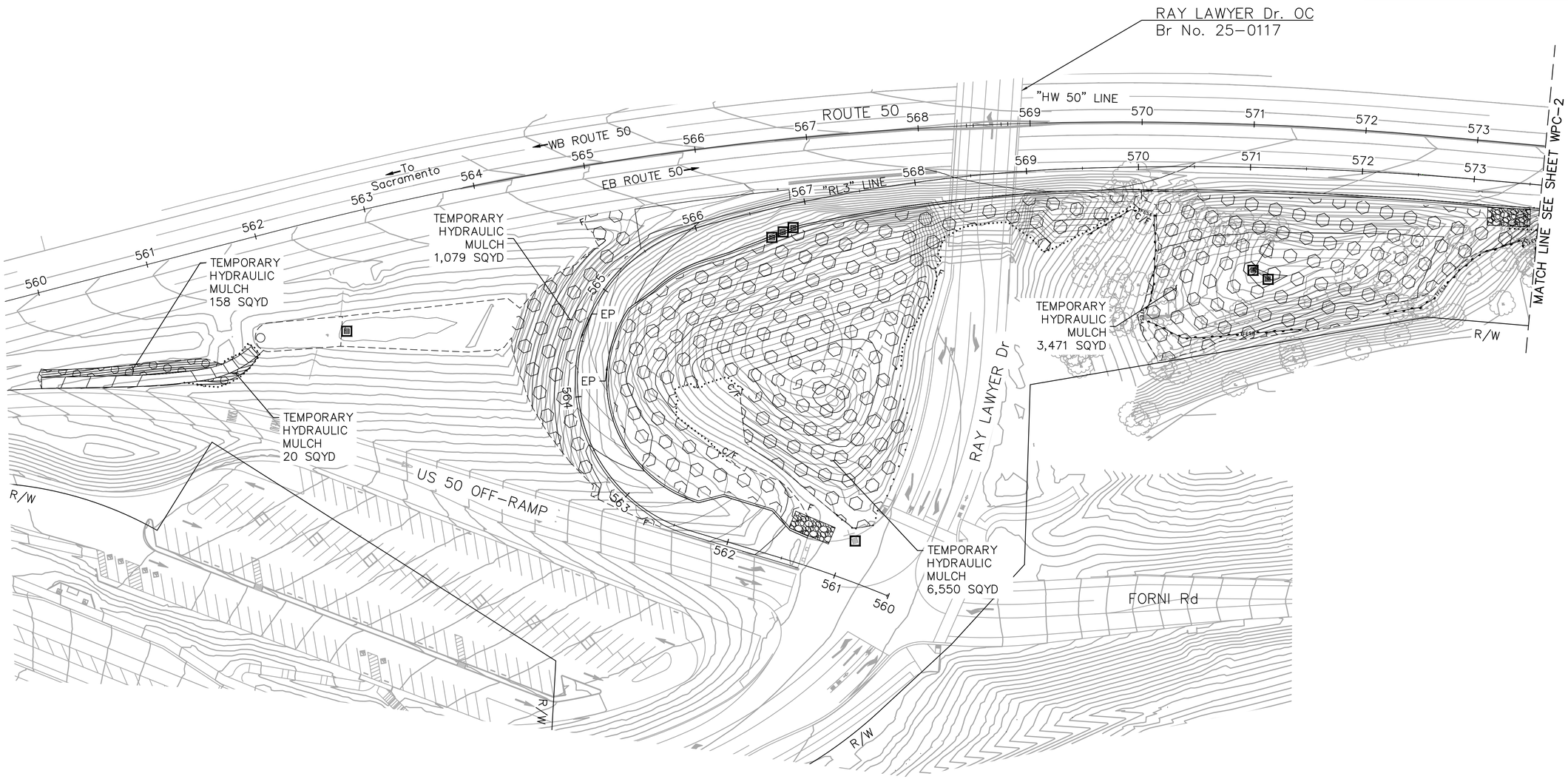

APPROVED FOR WATER POLLUTION CONTROL WORK ONLY

WATER POLLUTION CONTROL PLAN

SCALE: 1"=50'

WPC-1

STATE OF CALIFORNIA – DEPARTMENT OF TRANSPORTATION
Caltrans

CONSULTANT FUNCTIONAL SUPERVISOR: AARON BRUSATORI, PE

CALCULATED-DESIGNED BY: VERONICA GARCIA-MCGREW
CHECKED BY: AARON S. BRUSATORI

REVISED BY
DATE REVISED

LAST REVISION
DATE PLOTTED => 10/14/2020
TIME PLOTTED => 12:06 PM

BORDER LAST REVISED 7/2/2010
USERNAME => VGMCGREW
CAD FILE => 6884.009 EROSION CONTROL.DWG
RELATIVE BORDER SCALE IS IN INCHES 0 1 2 3
UNIT
PROJECT NUMBER & PHASE 03190001521

Dist	COUNTY	ROUTE	POST MILES TOTAL PROJECT	SHEET No.	TOTAL SHEETS
03	ED	50	16.4/16.8	13	45

REGISTERED CIVIL ENGINEER — DATE: 8-07-20

AUGUST 31, 2020
PLANS APPROVAL DATE

REGISTERED PROFESSIONAL ENGINEER — AARON BRUSATORI — No. 64384 — Exp. 6/30/21 — CIVIL — STATE OF CALIFORNIA

THE STATE OF CALIFORNIA OR ITS OFFICERS OR AGENTS SHALL NOT BE RESPONSIBLE FOR THE ACCURACY OR COMPLETENESS OF SCANNED COPIES OF THIS PLAN SHEET.

R.E.Y. ENGINEERS
905 SUTTER STREET, SUITE 200
FOLSOM, CA 95630

CITY OF PLACERVILLE
ENGINEERING DEPARTMENT
3101 CENTER STREET
PLACERVILLE, CA 95667

NOTE:

1. FOR ACCURATE RIGHT OF WAY DATA, CONTACT RIGHT OF WAY ENGINEERING AT THE DISTRICT OFFICE.

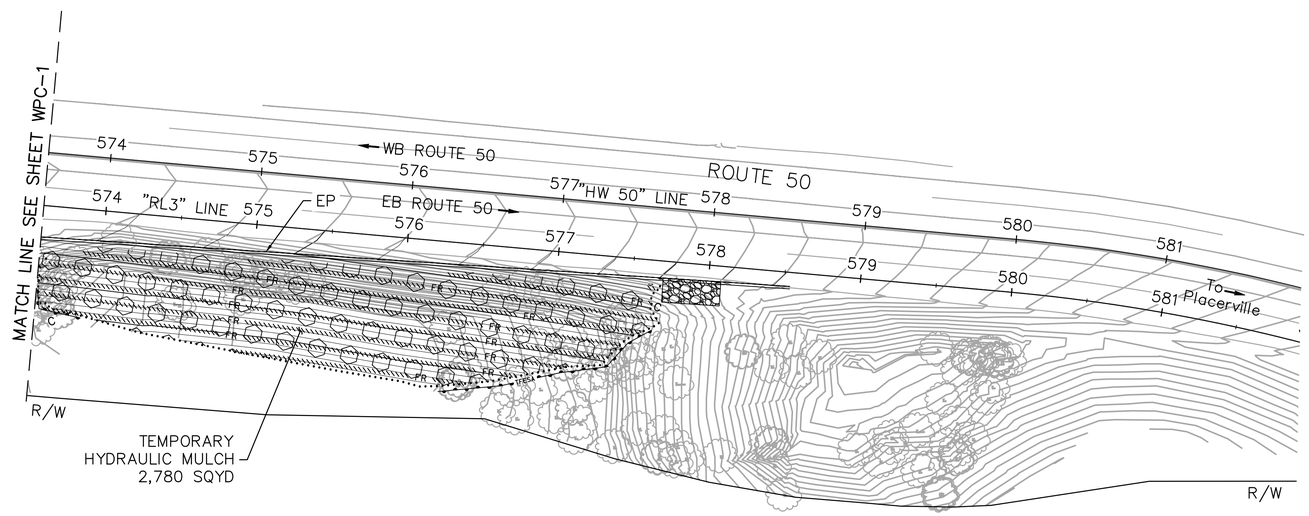

APPROVED FOR WATER POLLUTION CONTROL WORK ONLY

WATER POLLUTION CONTROL PLAN

SCALE: 1"=50'

WPC-2

REVISED BY	DATE REVISED

VERONICA GARCIA-MCGREW — CALCULATED-DESIGNED BY
AARON S. BRUSATORI — CHECKED BY

CONSULTANT FUNCTIONAL SUPERVISOR
AARON BRUSATORI, PE

STATE OF CALIFORNIA – DEPARTMENT OF TRANSPORTATION
Caltrans

LAST REVISION — DATE PLOTTED => 10/14/2020 TIME PLOTTED => 11:29 AM

Dist	COUNTY	ROUTE	POST MILES TOTAL PROJECT	SHEET No.	TOTAL SHEETS
03	ED	50	16.4/16.8	14	45

REGISTERED CIVIL ENGINEER — DATE: 8-07-20

AUGUST 31, 2020
PLANS APPROVAL DATE

REGISTERED PROFESSIONAL ENGINEER — AARON BRUSATORI — No. 64384 — Exp. 6/30/21 — CIVIL — STATE OF CALIFORNIA

THE STATE OF CALIFORNIA OR ITS OFFICERS OR AGENTS SHALL NOT BE RESPONSIBLE FOR THE ACCURACY OR COMPLETENESS OF SCANNED COPIES OF THIS PLAN SHEET.

R.E.Y. ENGINEERS
905 SUTTER STREET, SUITE 200
FOLSOM, CA 95630

CITY OF PLACERVILLE
ENGINEERING DEPARTMENT
3101 CENTER STREET
PLACERVILLE, CA 95667

NOTE:

1. FOR ACCURATE RIGHT OF WAY DATA, CONTACT RIGHT OF WAY ENGINEERING AT THE DISTRICT OFFICE.

LEGEND:

EROSION CONTROL (TYPE 1) CUT AND FILL SLOPES

FIBER ROLL (STANDARD PLAN H51)

F_ _ F/C.....C GRADING LIMITS

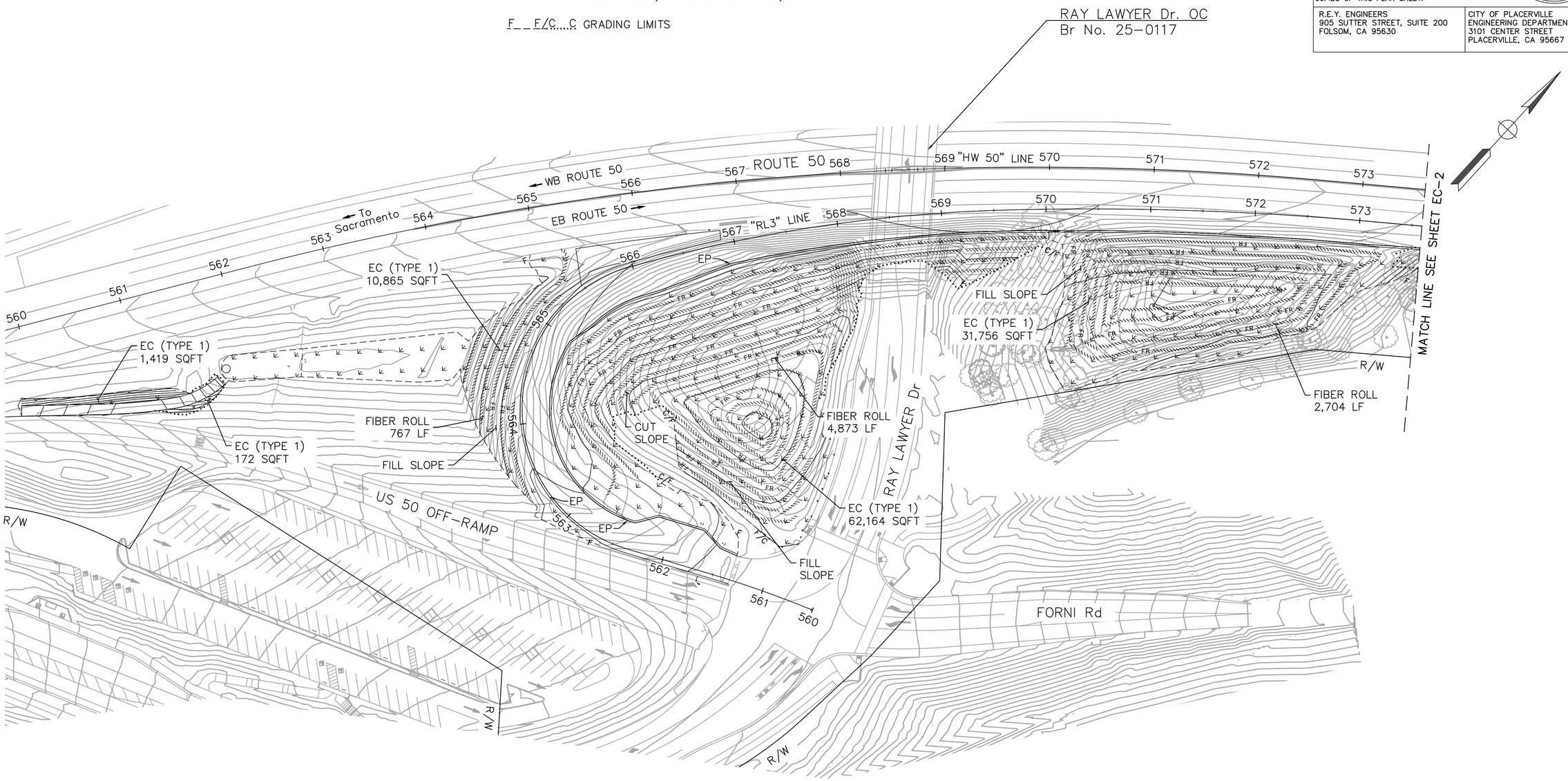

APPROVED FOR EROSION CONTROL WORK ONLY

EROSION CONTROL PLAN

SCALE: 1"=50'

EC-1

STATE OF CALIFORNIA – DEPARTMENT OF TRANSPORTATION

Caltrans

CONSULTANT FUNCTIONAL SUPERVISOR: AARON BRUSATORI, PE

VERONICA GARCIA-MCGREW — AARON S. BRUSATORI

CALCULATED-DESIGNED BY — CHECKED BY

REVISED BY — DATE REVISED

LAST REVISION — DATE PLOTTED => 10/14/2020 TIME PLOTTED => 12:06 PM

BORDER LAST REVISED 7/2/2010 | USERNAME => VGMCGREW CAD FILE => 6884.009 EROSION CONTROL.DWG | RELATIVE BORDER SCALE IS IN INCHES 0 1 2 3 | UNIT | PROJECT NUMBER & PHASE 03190001521

Dist	COUNTY	ROUTE	POST MILES TOTAL PROJECT	SHEET No.	TOTAL SHEETS
03	ED	50	16.4/16.8	15	45

REGISTERED CIVIL ENGINEER — DATE: 8-07-20

AUGUST 31, 2020
PLANS APPROVAL DATE

REGISTERED PROFESSIONAL ENGINEER — AARON BRUSATORI — No. 64384 — Exp. 6/30/21 — CIVIL — STATE OF CALIFORNIA

THE STATE OF CALIFORNIA OR ITS OFFICERS OR AGENTS SHALL NOT BE RESPONSIBLE FOR THE ACCURACY OR COMPLETENESS OF SCANNED COPIES OF THIS PLAN SHEET.

R.E.Y. ENGINEERS
905 SUTTER STREET, SUITE 200
FOLSOM, CA 95630

CITY OF PLACERVILLE
ENGINEERING DEPARTMENT
3101 CENTER STREET
PLACERVILLE, CA 95667

NOTE:

1. FOR ACCURATE RIGHT OF WAY DATA, CONTACT RIGHT OF WAY ENGINEERING AT THE DISTRICT OFFICE.

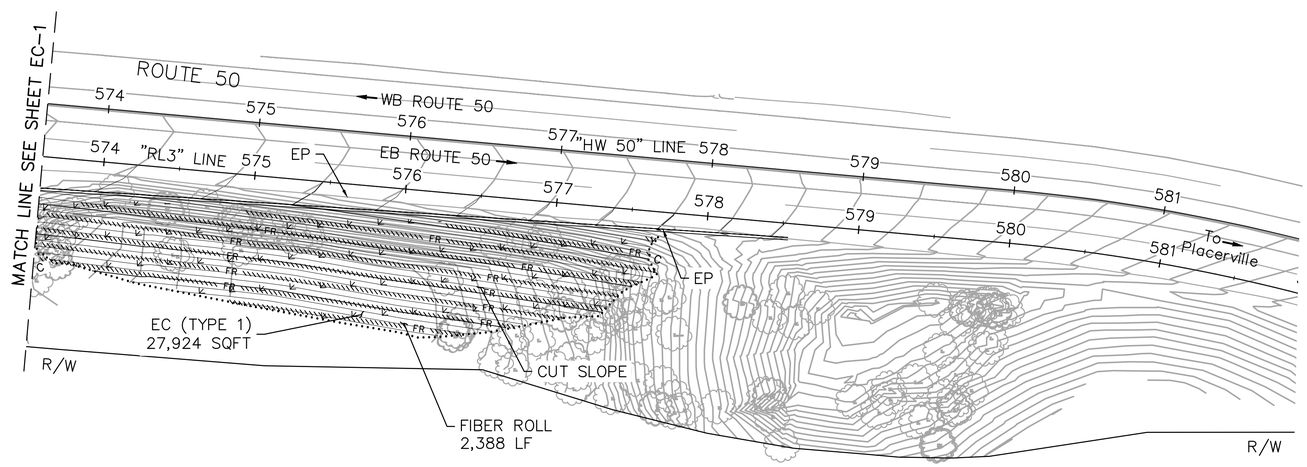

APPROVED FOR EROSION CONTROL WORK ONLY

EROSION CONTROL PLAN

SCALE: 1"=50'

EC-2

STATE OF CALIFORNIA – DEPARTMENT OF TRANSPORTATION
Caltrans

CONSULTANT FUNCTIONAL SUPERVISOR: AARON BRUSATORI, PE

CALCULATED-DESIGNED BY: VERONICA GARCIA-MCGREW
CHECKED BY: AARON S. BRUSATORI

REVISED BY
DATE REVISED

LAST REVISION
DATE PLOTTED => 10/14/2020
TIME PLOTTED => 11:29 AM

Dist	COUNTY	ROUTE	POST MILES TOTAL PROJECT	SHEET No.	TOTAL SHEETS
03	ED	50	16.4/16.8	16	45

REGISTERED CIVIL ENGINEER — DATE: 8-07-20

AUGUST 31, 2020
PLANS APPROVAL DATE

REGISTERED PROFESSIONAL ENGINEER — AARON BRUSATORI — No. 64384 — Exp. 6/30/21 — CIVIL — STATE OF CALIFORNIA

THE STATE OF CALIFORNIA OR ITS OFFICERS OR AGENTS SHALL NOT BE RESPONSIBLE FOR THE ACCURACY OR COMPLETENESS OF SCANNED COPIES OF THIS PLAN SHEET.

R.E.Y. ENGINEERS
905 SUTTER STREET, SUITE 200
FOLSOM, CA 95630

CITY OF PLACERVILLE
ENGINEERING DEPARTMENT
3101 CENTER STREET
PLACERVILLE, CA 95667

EROSION CONTROL QUANTITIES

FIBER ROLLS	HYDRAULIC BIOTIC GROWTH MEDIUM WITH FIBER REINFORCED MATRIX	DESCRIPTION	SHEET
LF	SQFT		
	141,213	EC	EC-1 / EC-2
10,732		FIBER ROLLS	
10,732	141,213	TOTAL	

FIBER ROLLS

SEQUENCE	ITEM	MATERIAL	MATERIAL TYPE	REMARKS
FIBER ROLLS MUST BE INSTALLED AFTER THE HBGM WITH FRM HAS CURED	FIBER ROLLS	8 TO 10 INCHES IN DIA	RICE STRAW FILLED AND JUTE COVERED	TYPE 1 FIBER ROLL INSTALLATION. PLACE 10 FEET APART.

EROSION CONTROL TYPE 1

SEQUENCE	ITEM	MATERIAL		APPLICATION RATE
		DESCRIPTION	TYPE	
STEP 1	HYDRAULIC BIOTIC GROWTH MEDIUM WITH FIBER REINFORCED MATRIX	SEED	MIX	50 LB/ACRE
		HGBM	–	4,000/ACRE
		FRM	–	2,500 LB/ACRE

SEED MIX

BOTANICAL NAME (COMMON NAME)	PERCENT GERMINATION (MINIMUM)	POUNDS PURE LIVE SEED PER ACRE (SLOPE MEASUREMENT)
ACHILLEA MILLIFOLIUM (NATIVE WHITE YARROW)	60	1
AMSINCKIA MENZIESII	40	3
ACMISPON AMERICANA (SPANISH CLOVER)	60	2.5
BROMUS CARINATUS, SIERRA 4500 (CALIFORNIA BROME)	65	12
ELYMUS GLAUCUS, SIERRA 4500 (BLUE WILD RYE)	60	8
ESCHSCHOLZIA CALIFORNICA	50	1.5
FESTUCA MICROSTACHYS (THREE WEEKS FESCUE)	60	6
LASTHENIA CALIFORNICA (DWARF GOLDFIELD)	50	1.5
LAYIA PLATYGLOSSA (TIDY TIPS)	35	1.5
LUPINUS NANUS (SKY LUPINE)	60	4
STIPA PULCHRA (PURPLE NEEDLEGRASS)	50	6
TRIFOLIUM WILDENOVII (TOM CAT CLOVER)	60	3

EROSION CONTROL LEGEND

NO SCALE

ECL-1

STATE OF CALIFORNIA – DEPARTMENT OF TRANSPORTATION
Caltrans

CONSULTANT FUNCTIONAL SUPERVISOR: AARON BRUSATORI, PE

CALCULATED-DESIGNED BY: VERONICA GARCIA-MCGREW
CHECKED BY: AARON S. BRUSATORI

REVISED BY
DATE REVISED

LAST REVISION
DATE PLOTTED => 10/14/2020
TIME PLOTTED => 11:29 AM

Dist	COUNTY	ROUTE	POST MILES TOTAL PROJECT	SHEET No.	TOTAL SHEETS
03	ED	50	16.4/16.8	17	45

REGISTERED CIVIL ENGINEER — DATE: 8-07-20

AUGUST 31, 2020
PLANS APPROVAL DATE

REGISTERED PROFESSIONAL ENGINEER — AARON BRUSATORI — No. 64384 — Exp. 6/30/21 — CIVIL — STATE OF CALIFORNIA

THE STATE OF CALIFORNIA OR ITS OFFICERS OR AGENTS SHALL NOT BE RESPONSIBLE FOR THE ACCURACY OR COMPLETENESS OF SCANNED COPIES OF THIS PLAN SHEET.

R.E.Y. ENGINEERS
905 SUTTER STREET, SUITE 200
FOLSOM, CA 95630

CITY OF PLACERVILLE
ENGINEERING DEPARTMENT
3101 CENTER STREET
PLACERVILLE, CA 95667

NOTE:

1. THIS PLAN ACCURATE FOR FOR CONTOUR GRADING WORK ONLY.
2. CONTRACTOR SHALL REFER TO THE GEOTECHNICAL DESIGN REPORT DATED APRIL 8, 2020 PREPARED BY SIERRA GEOTECH FOR ALL GEOTECHNICAL REQUIREMENTS AND RECOMMENDATION THAT MUST BE FOLLOWED.
3. REFER TO DRAINAGE SHEETS D-1 AND DP-1 FOR STORM DRAIN IMPROVEMENTS.
4. CONTOURS AT BASE OF DRAINAGE BASIN ARE SHOWN AT 0.2' (MINOR) AND 1' (MAJOR) INTERVALS.

LEGEND:

- 1800 — FINISH GRADE CONTOURS (2.0' INTERVAL, UNLESS NOTED OTHERWISE)
- F _ F/C....C — GRADING LIMITS
- TFESA — TEMPORARY FENCE (TYPE ESA)

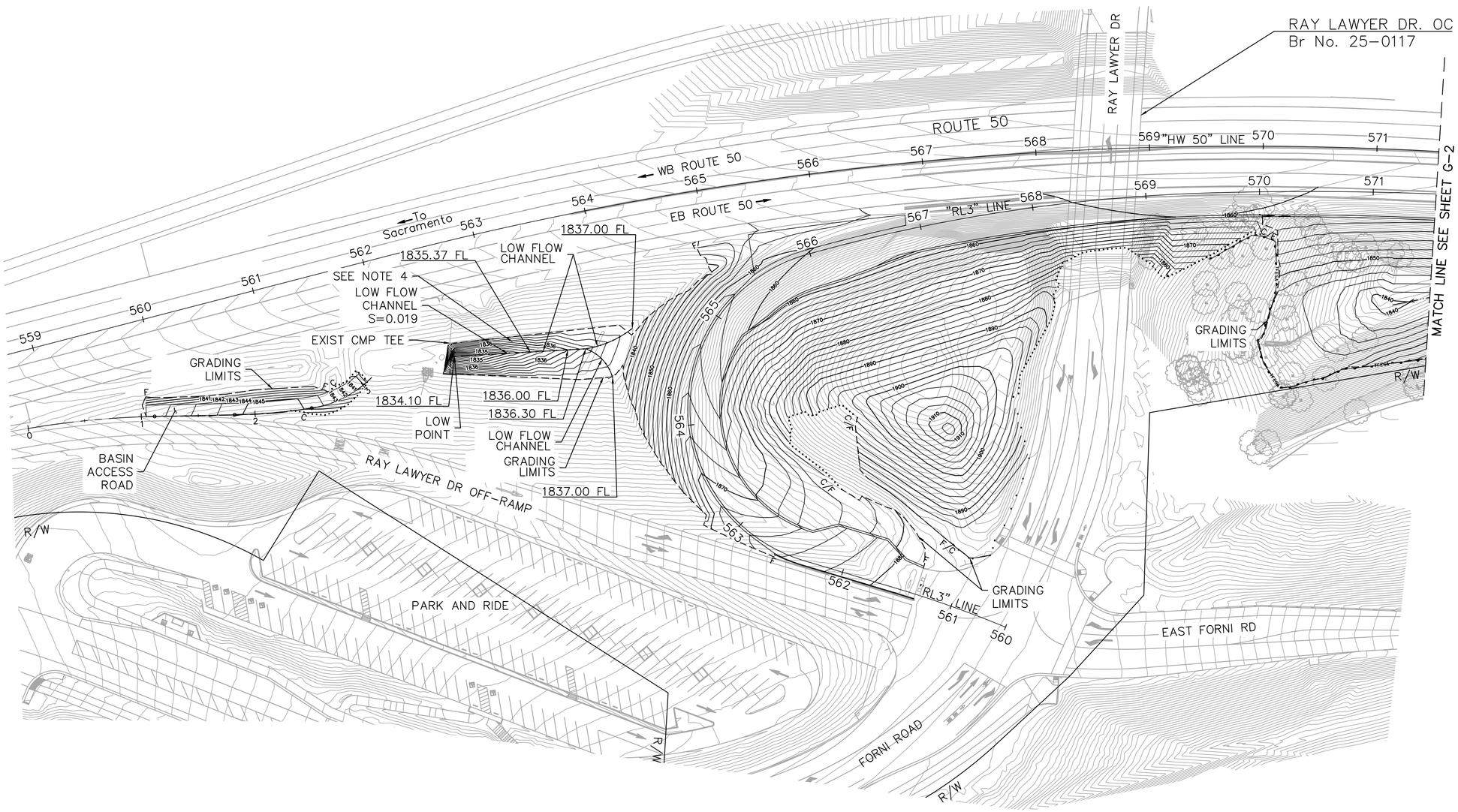

APPROVED FOR CONTOUR GRADING WORK ONLY

CONTOUR GRADING

SCALE: 1" = 50'

G-1

STATE OF CALIFORNIA – DEPARTMENT OF TRANSPORTATION

Caltrans

CONSULTANT FUNCTIONAL SUPERVISOR: AARON BRUSATORI, PE

CALCULATED-DESIGNED BY: VERONICA GARCIA-MCGREW — CHECKED BY: AARON S. BRUSATORI

REVISED BY — DATE REVISED

LAST REVISION — DATE PLOTTED => 10/14/2020 — TIME PLOTTED => 11:29 AM

Dist	COUNTY	ROUTE	POST MILES TOTAL PROJECT	SHEET No.	TOTAL SHEETS
03	ED	50	16.4/16.8	18	45

REGISTERED CIVIL ENGINEER — DATE: 8-07-20

AUGUST 31, 2020
PLANS APPROVAL DATE

REGISTERED PROFESSIONAL ENGINEER — AARON BRUSATORI — No. 64384 — Exp. 6/30/21 — CIVIL — STATE OF CALIFORNIA

THE STATE OF CALIFORNIA OR ITS OFFICERS OR AGENTS SHALL NOT BE RESPONSIBLE FOR THE ACCURACY OR COMPLETENESS OF SCANNED COPIES OF THIS PLAN SHEET.

R.E.Y. ENGINEERS
905 SUTTER STREET, SUITE 200
FOLSOM, CA 95630

CITY OF PLACERVILLE
ENGINEERING DEPARTMENT
3101 CENTER STREET
PLACERVILLE, CA 95667

NOTE:

1. THIS PLAN ACCURATE FOR FOR CONTOUR GRADING WORK ONLY.

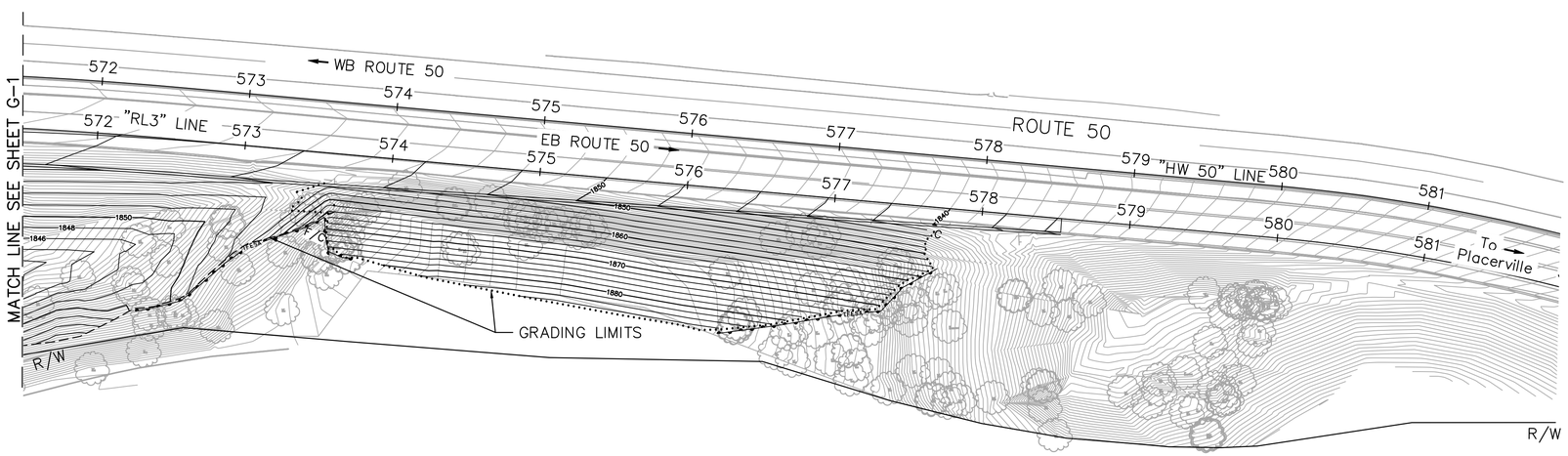

APPROVED FOR CONTOUR GRADING WORK ONLY

CONTOUR GRADING

SCALE: 1" = 50'

G-2

STATE OF CALIFORNIA – DEPARTMENT OF TRANSPORTATION

Caltrans

CONSULTANT FUNCTIONAL SUPERVISOR: AARON BRUSATORI, PE

CALCULATED-DESIGNED BY: VERONICA GARCIA-MCGREW

CHECKED BY: AARON S. BRUSATORI

REVISED BY

DATE REVISED

LAST REVISION — DATE PLOTTED => 10/14/2020 TIME PLOTTED => 11:30 AM

Dist	COUNTY	ROUTE	POST MILES TOTAL PROJECT	SHEET No.	TOTAL SHEETS
03	ED	50	16.4/16.8	19	45

REGISTERED CIVIL ENGINEER — DATE: 8-07-20

AUGUST 31, 2020
PLANS APPROVAL DATE

REGISTERED PROFESSIONAL ENGINEER — AARON BRUSATORI — No. 64384 — Exp. 6/30/21 — CIVIL — STATE OF CALIFORNIA

THE STATE OF CALIFORNIA OR ITS OFFICERS OR AGENTS SHALL NOT BE RESPONSIBLE FOR THE ACCURACY OR COMPLETENESS OF SCANNED COPIES OF THIS PLAN SHEET.

R.E.Y. ENGINEERS
905 SUTTER STREET, SUITE 200
FOLSOM, CA 95630

CITY OF PLACERVILLE
ENGINEERING DEPARTMENT
3101 CENTER STREET
PLACERVILLE, CA 95667

NOTE:
1. FOR ACCURATE RIGHT OF WAY DATA, CONTACT RIGHT OF WAY ENGINEERING AT THE DISTRICT OFFICE.
2. THIS PLAN ACCURATE FOR FOR DRAINAGE WORK ONLY.
3. CONTOURS AT BASE OF DRAINAGE BASIN ARE SHOWN AT 0.2' (MINOR) AND 1' (MAJOR) INTERVALS.

LEGEND:

- No. – DRAINAGE SYSTEM NUMBER
- (x) – DRAINAGE ITEM
- (D) –REINFORCED CONCRETE PIPE INLET
- – DRAINAGE INLET
- – 18" CONCRETE FLARED END SECTION
- – LOW FLOW CHANNEL DRAINAGE SWALE
- – ROCK SLOPE PROTECTION
- – HMA DITCH
- – DETENTION BASIN (DB–1)
- – BIOFILTRATION SWALE (BIOSWL–1)

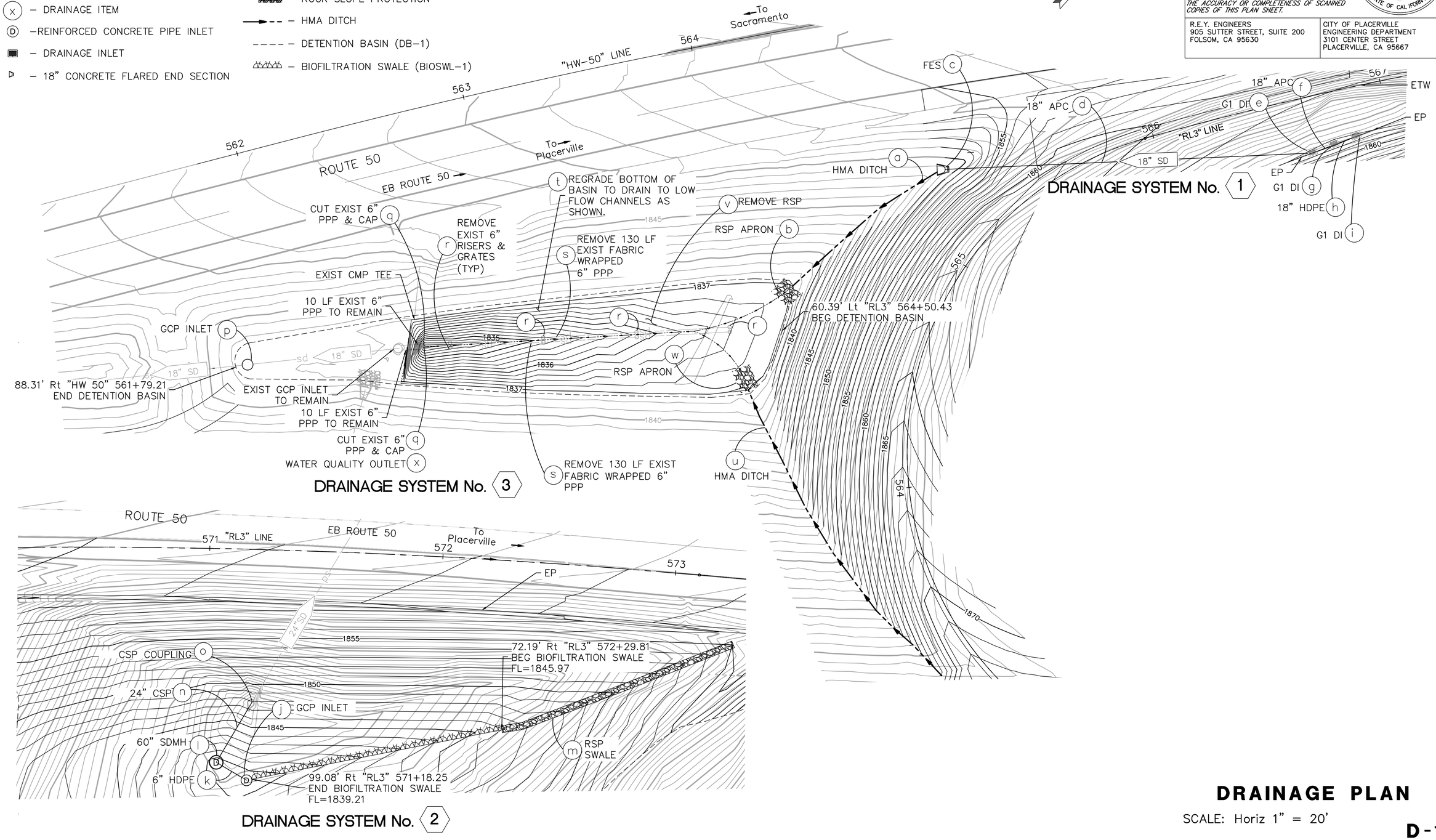

DRAINAGE PLAN

SCALE: Horiz 1" = 20'

D-1

REVISED BY | DATE REVISED
VERONICA GARCIA-MCGREW | AARON S. BRUSATORI
CALCULATED-DESIGNED BY | CHECKED BY
CONSULTANT FUNCTIONAL SUPERVISOR | AARON BRUSATORI, PE
STATE OF CALIFORNIA – DEPARTMENT OF TRANSPORTATION
Caltrans

LAST REVISION | DATE PLOTTED => 10/14/2020 TIME PLOTTED => 11:30 AM

Dist	COUNTY	ROUTE	POST MILES TOTAL PROJECT	SHEET No.	TOTAL SHEETS
03	ED	50	16.4/16.8	20	45

REGISTERED CIVIL ENGINEER — DATE: 8-07-20

AUGUST 31, 2020
PLANS APPROVAL DATE

REGISTERED PROFESSIONAL ENGINEER — AARON BRUSATORI — No. 64384 — Exp. 6/30/21 — CIVIL — STATE OF CALIFORNIA

THE STATE OF CALIFORNIA OR ITS OFFICERS OR AGENTS SHALL NOT BE RESPONSIBLE FOR THE ACCURACY OR COMPLETENESS OF SCANNED COPIES OF THIS PLAN SHEET.

R.E.Y. ENGINEERS
905 SUTTER STREET, SUITE 200
FOLSOM, CA 95630

CITY OF PLACERVILLE
ENGINEERING DEPARTMENT
3101 CENTER STREET
PLACERVILLE, CA 95667

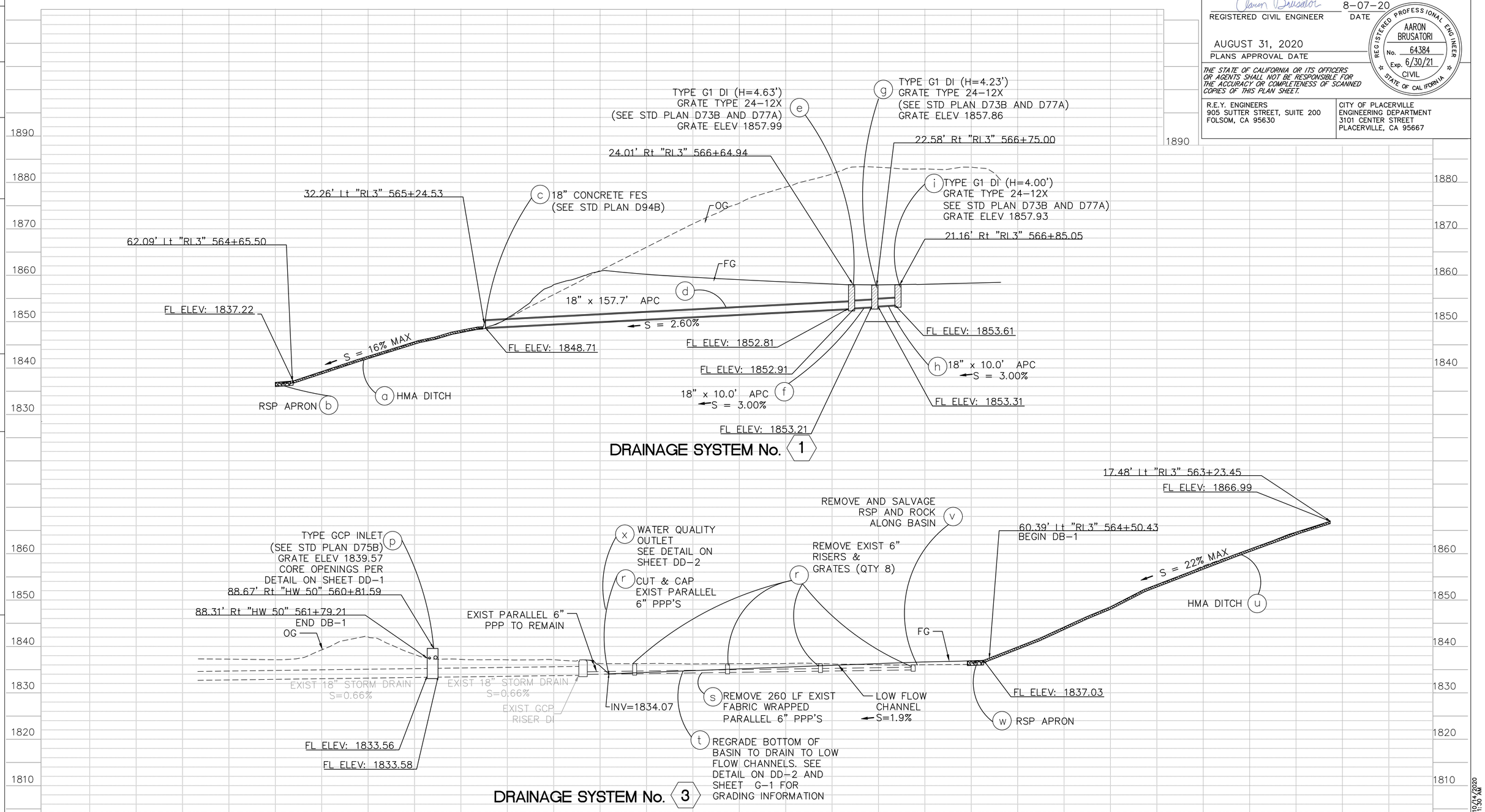

DRAINAGE PROFILE

SCALE: Horiz 1" = 20'
Vert 1" = 10'

DP-1

STATE OF CALIFORNIA – DEPARTMENT OF TRANSPORTATION
Caltrans

CONSULTANT FUNCTIONAL SUPERVISOR: AARON BRUSATORI, PE

CALCULATED-DESIGNED BY: VERONICA GARCIA-MCGREW
CHECKED BY: AARON S. BRUSATORI

REVISED BY
DATE REVISED

DATE PLOTTED => 10/14/2020
TIME PLOTTED => 11:30 AM

LAST REVISION

BORDER LAST REVISED 7/2/2010

USERNAME => VGMCGREW
CAD FILE => 6884.009 DRAINAGE PLAN.DWG

RELATIVE BORDER SCALE IS IN INCHES 0 1 2 3

UNIT

PROJECT NUMBER & PHASE 03190001521

Dist	COUNTY	ROUTE	POST MILES TOTAL PROJECT	SHEET No.	TOTAL SHEETS
03	ED	50	16.4/16.8	21	45

REGISTERED CIVIL ENGINEER — DATE: 8-07-20

AUGUST 31, 2020
PLANS APPROVAL DATE

REGISTERED PROFESSIONAL ENGINEER — AARON BRUSATORI — No. 64384 — Exp. 6/30/21 — CIVIL — STATE OF CALIFORNIA

THE STATE OF CALIFORNIA OR ITS OFFICERS OR AGENTS SHALL NOT BE RESPONSIBLE FOR THE ACCURACY OR COMPLETENESS OF SCANNED COPIES OF THIS PLAN SHEET.

R.E.Y. ENGINEERS
905 SUTTER STREET, SUITE 200
FOLSOM, CA 95630

CITY OF PLACERVILLE
ENGINEERING DEPARTMENT
3101 CENTER STREET
PLACERVILLE, CA 95667

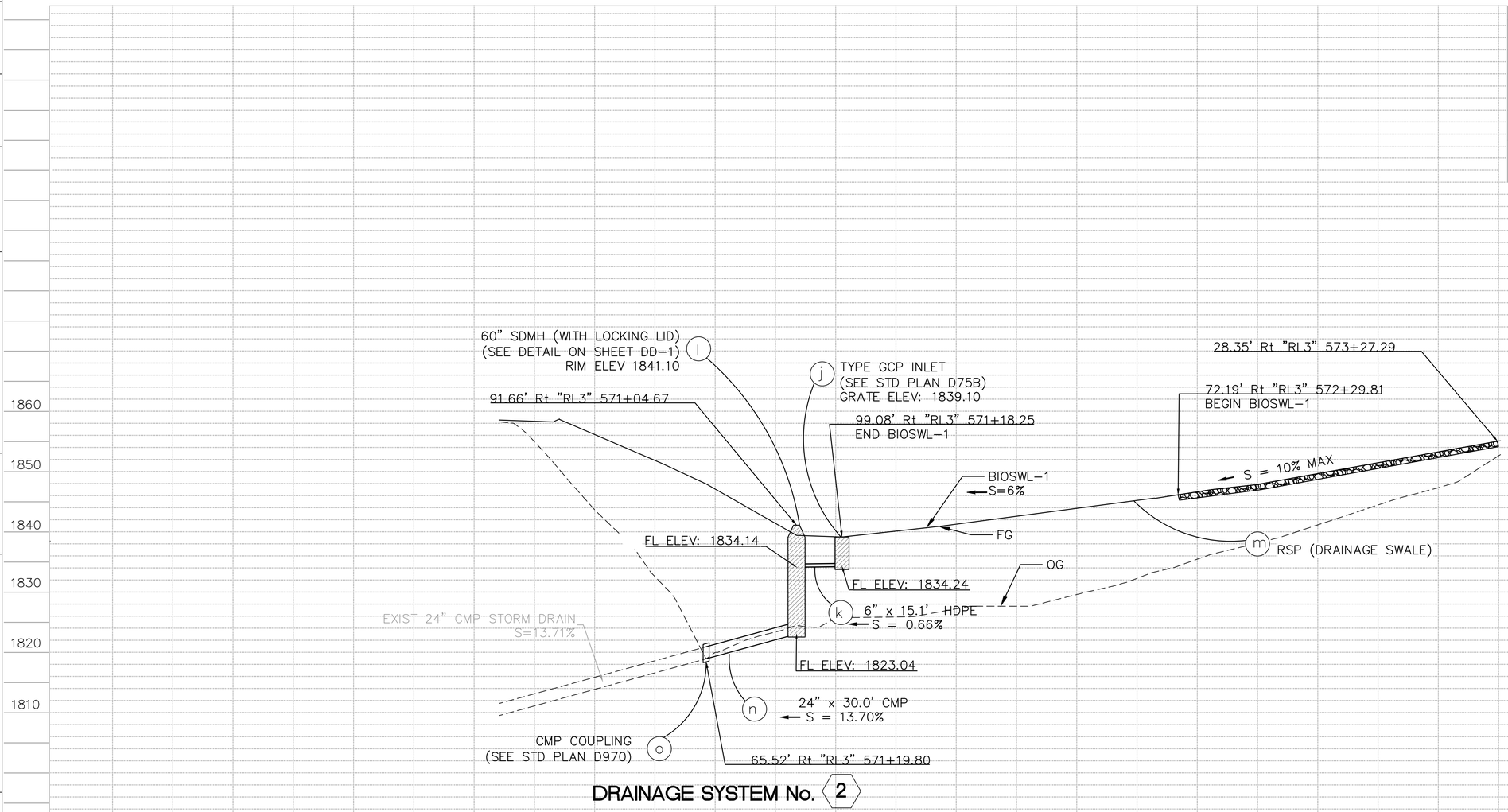

DRAINAGE SYSTEM No. 2

DRAINAGE PROFILE

SCALE: Horiz 1" = 20'
Vert 1" = 10'

DP-2

STATE OF CALIFORNIA – DEPARTMENT OF TRANSPORTATION
Caltrans

CONSULTANT FUNCTIONAL SUPERVISOR: AARON BRUSATORI, PE

CALCULATED-DESIGNED BY: VERONICA GARCIA-MCGREW
CHECKED BY: AARON S. BRUSATORI

REVISED BY
DATE REVISED

LAST REVISION
DATE PLOTTED => 10/14/2020
TIME PLOTTED => 11:30 AM

Dist	COUNTY	ROUTE	POST MILES TOTAL PROJECT	SHEET No.	TOTAL SHEETS
03	ED	50	16.4/16.8	22	45

REGISTERED CIVIL ENGINEER — DATE: 8-07-20

AUGUST 31, 2020
PLANS APPROVAL DATE

REGISTERED PROFESSIONAL ENGINEER — AARON BRUSATORI — No. 64384 — Exp. 6/30/21 — CIVIL — STATE OF CALIFORNIA

THE STATE OF CALIFORNIA OR ITS OFFICERS OR AGENTS SHALL NOT BE RESPONSIBLE FOR THE ACCURACY OR COMPLETENESS OF SCANNED COPIES OF THIS PLAN SHEET.

R.E.Y. ENGINEERS
905 SUTTER STREET, SUITE 200
FOLSOM, CA 95630

CITY OF PLACERVILLE
ENGINEERING DEPARTMENT
3101 CENTER STREET
PLACERVILLE, CA 95667

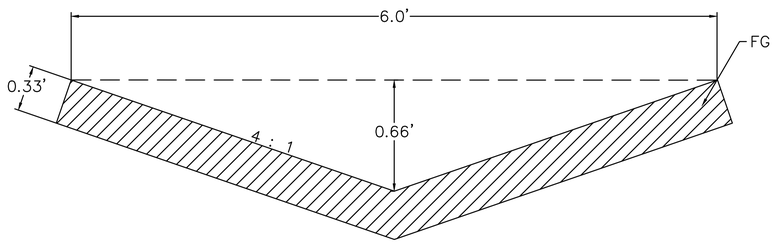

HMA DITCH

1 a
3 u

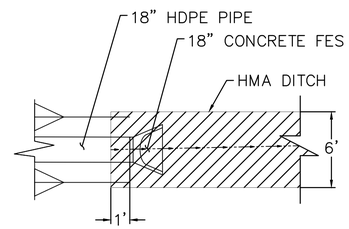

PLAN

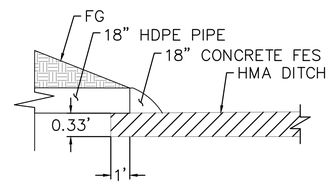

SECTION

HMA DITCH AT FES

1 a c

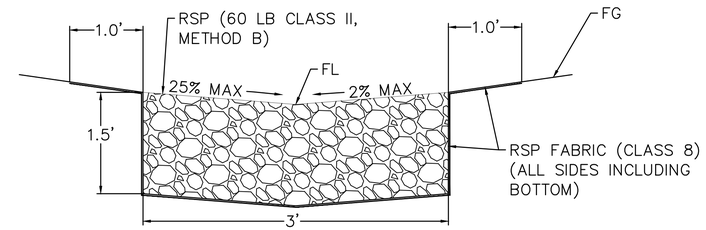

2 m

RSP DRAINAGE SWALE

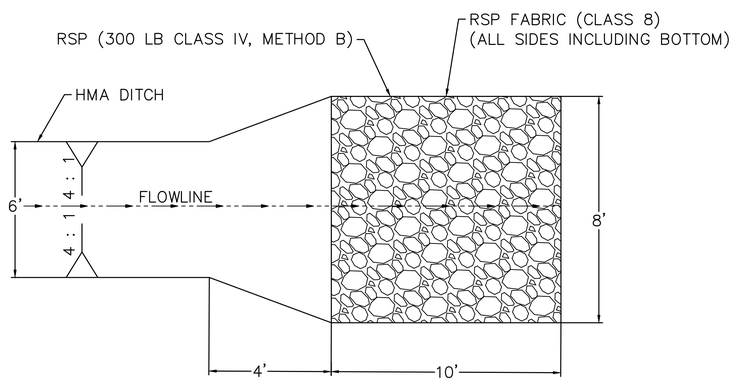

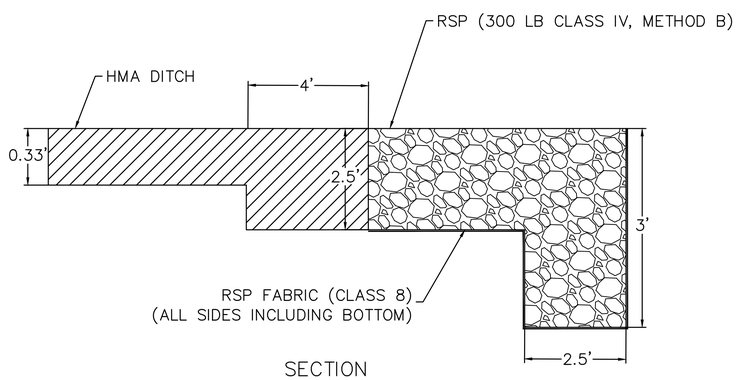

SECTION

RSP APRON

1 b
3 w

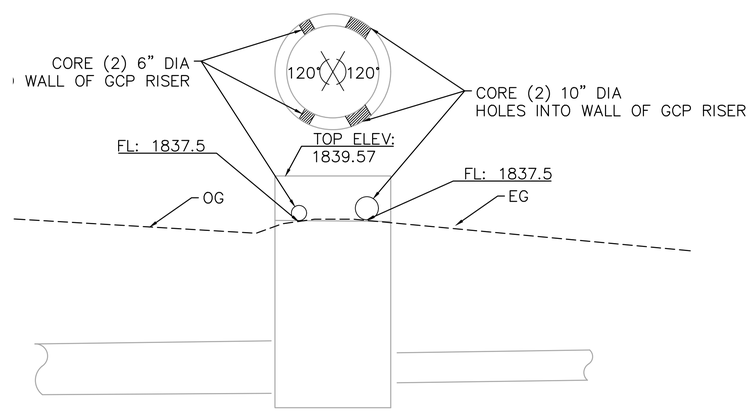

CORE OPENINGS INTO GCP RISER

3 p

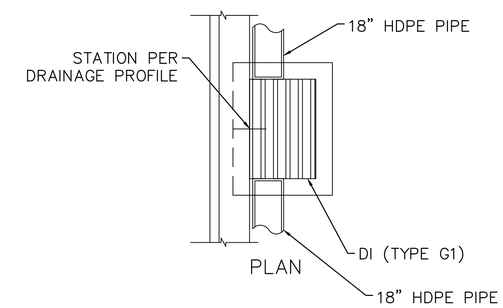

PLAN

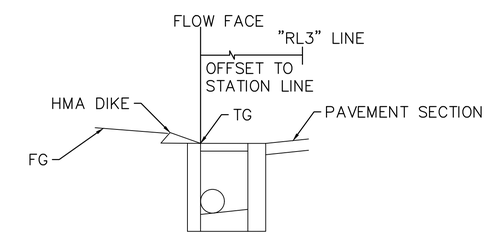

SECTION

1 e g i

INLET ADJACENT TO HMA DIKE

DRAINAGE DETAILS

NO SCALE

DD-1

STATE OF CALIFORNIA – DEPARTMENT OF TRANSPORTATION
Caltrans

CONSULTANT FUNCTIONAL SUPERVISOR: AARON BRUSATORI, PE
CALCULATED-DESIGNED BY: VERONICA GARCIA-MCGREW
CHECKED BY: AARON S. BRUSATORI
REVISED BY
DATE REVISED

LAST REVISION
DATE PLOTTED => 10/14/2020
TIME PLOTTED => 11:30 AM

Dist	COUNTY	ROUTE	POST MILES TOTAL PROJECT	SHEET No.	TOTAL SHEETS
03	ED	50	16.4/16.8	23	45

REGISTERED CIVIL ENGINEER — DATE: 8-07-20

AUGUST 31, 2020
PLANS APPROVAL DATE

REGISTERED PROFESSIONAL ENGINEER — AARON BRUSATORI — No. 64384 — Exp. 6/30/21 — CIVIL — STATE OF CALIFORNIA

THE STATE OF CALIFORNIA OR ITS OFFICERS OR AGENTS SHALL NOT BE RESPONSIBLE FOR THE ACCURACY OR COMPLETENESS OF SCANNED COPIES OF THIS PLAN SHEET.

R.E.Y. ENGINEERS
905 SUTTER STREET, SUITE 200
FOLSOM, CA 95630

CITY OF PLACERVILLE
ENGINEERING DEPARTMENT
3101 CENTER STREET
PLACERVILLE, CA 95667

NOTES:
1. ANY CONNECTIONS ABOVE MANHOLE BASE SHALL BE CORED AND INSTALLED WITH RESILIENT FLEXIBLE CONNECTION. AN ADDITIONAL FLEXIBLE CONNECTION SHALL BE PLACED 24" OUTSIDE BASE.
2. IF PIPE CROWN TO FINISH GRADE IS BETWEEN 30" AND 39", USE A 18" CONE. IF LESS THAN 30" USE A FLAT SLAB TOP.
3. COVER SHALL BE SUPPLIED WITH BOLT DOWN OR LOCKING DEVICES.

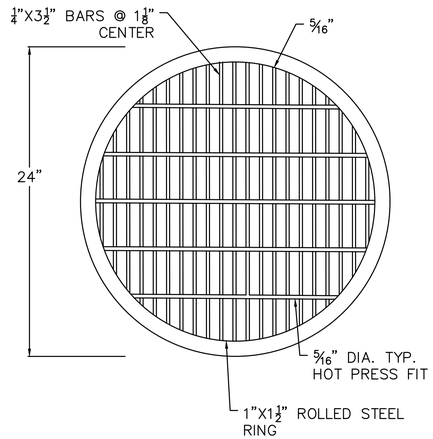

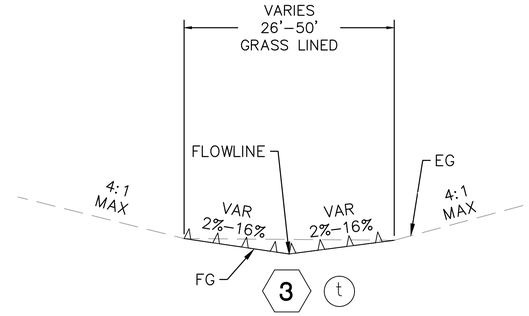

3 t

LOW FLOW CHANNEL DRAINAGE SWALE

TABLE OF DIMENSIONS SEE NOTE 2			
MH	A	B	T (MIN)
60"	60"	24"	6"

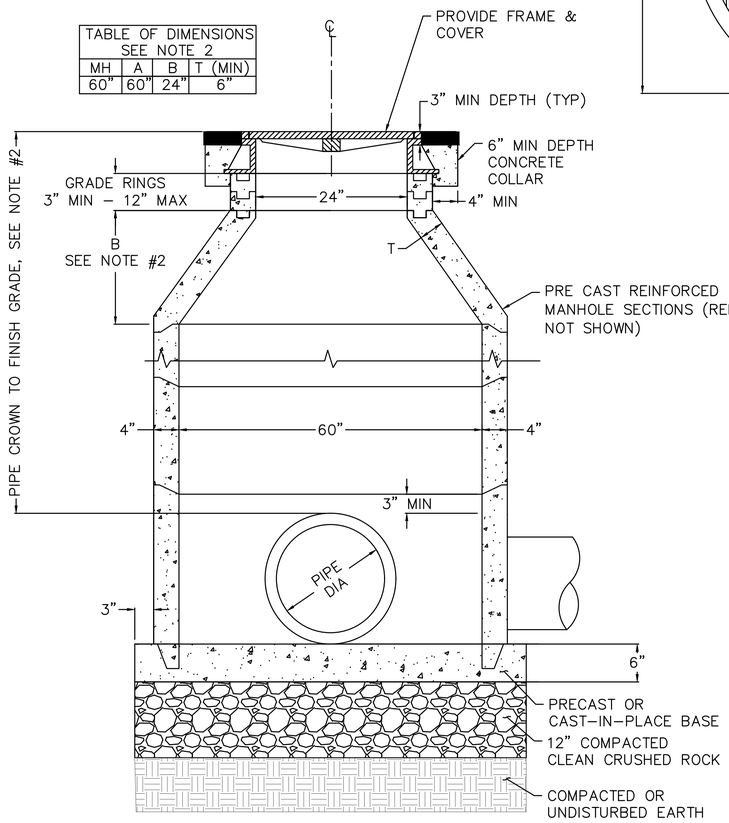

60" SDMH

2 l

1. 6" TEST CAP WITH 1 3/8" DRILLED ORIFICE
2. 6" TEE WITH DRILLED PERFORATIONS AT 3" O.C., 180° APART
3. 6" THREADED CLEAN-OUT
4. 6" PPP WITH DRILLED PERFOPRATIONS AT 3" O.C., 180° APART
5. 6" ROUND ATRIUM GRATE
6. 1" DRILLED PERFORATIONS AT 3" O.C. VERTICAL, 2 ROWS, 180° APART

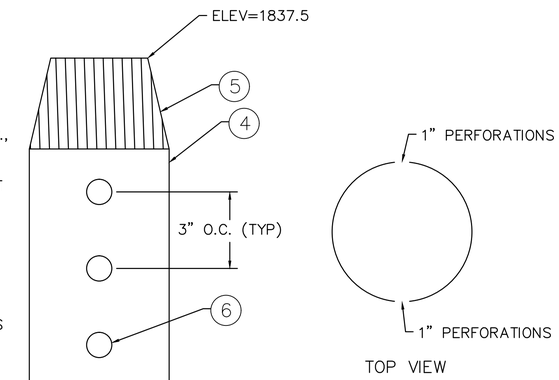

TOP VIEW

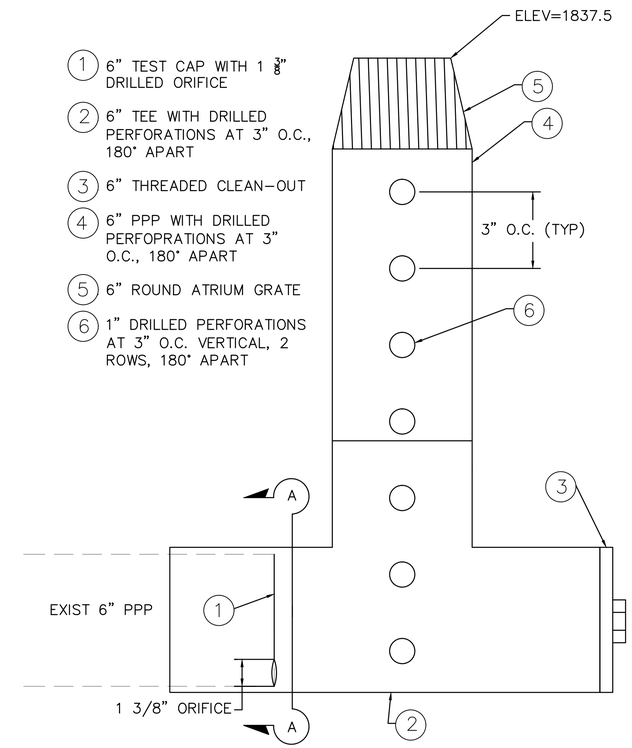

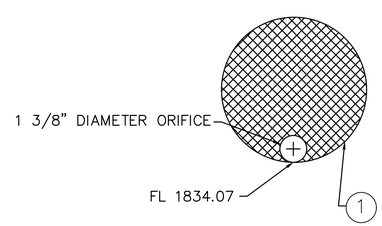

SECTION A-A

WATER QUALITY OUTLET

3 x

DRAINAGE DETAILS

NO SCALE

DD-2

STATE OF CALIFORNIA - DEPARTMENT OF TRANSPORTATION
Caltrans

CONSULTANT FUNCTIONAL SUPERVISOR: AARON BRUSATORI, PE
CALCULATED-DESIGNED BY: VERONICA GARCIA-MCGREW
CHECKED BY: AARON S. BRUSATORI
REVISED BY
DATE REVISED

LAST REVISION
DATE PLOTTED => 10/14/2020
TIME PLOTTED => 11:31 AM

Dist	COUNTY	ROUTE	POST MILES TOTAL PROJECT	SHEET No.	TOTAL SHEETS
03	ED	50	16.4/16.8	24	45

REGISTERED CIVIL ENGINEER — DATE: 8-07-20

AUGUST 31, 2020
PLANS APPROVAL DATE

REGISTERED PROFESSIONAL ENGINEER — AARON BRUSATORI — No. 64384 — Exp. 6/30/21 — CIVIL — STATE OF CALIFORNIA

THE STATE OF CALIFORNIA OR ITS OFFICERS OR AGENTS SHALL NOT BE RESPONSIBLE FOR THE ACCURACY OR COMPLETENESS OF SCANNED COPIES OF THIS PLAN SHEET.

R.E.Y. ENGINEERS
905 SUTTER STREET, SUITE 200
FOLSOM, CA 95630

CITY OF PLACERVILLE
ENGINEERING DEPARTMENT
3101 CENTER STREET
PLACERVILLE, CA 95667

NOTE:

(N) = NOT A SEPARATE PAY ITEM, FOR INFORMATION ONLY.

ABBREVIATIONS:

S STANDARD JOINT

APC ALLOWABLE PIPE MATERIAL

DESIGNATION	RCP CL 3	HDPE PIPE TYPE S
18" APC	YES	YES

DRAINAGE QUANTITIES

DRAINAGE SYSTEM NO.	DRAINAGE UNIT	STRUCTURE EXCAVATION (REMOVE RSP)	REMOVE CULVERT	HMA (MISCELLANEOUS AREAS)	18" CONCRETE FES	18" APC	36" REINFORCED CONCRETE PIPE INLET	60" SDMH	6" HDPE (TYPE S)	24" CSP	WATER QUALITY OUTLET	STRUCTURAL CONCRETE (DRAINAGE INLET)	INLET FRAME AND GRATE	DRAINAGE INLET MARKER	ROCK SLOPE PROTECTION: 60 LB CLASS II, METHOD B	ROCK SLOPE PROTECTION: 300 LB CLASS IV, METHOD B	ROCK SLOPE PROTECTION: RSP FABRIC (CLASS 8)	24" CSP COUPLING (N)	REMOVE EXISTING RISERS AND GRATES (N)	CUT & CAP EXIST 6"PPP (N)	BAR REINFORCEMENT (N)	HEIGHT OF INLET (N)	PIPE JOINT CLASSIFICATION (N)	LADDER (N)	HEIGHT OF COVER (N)	DESCRIPTION	STATION	DRAINAGE UNIT	DRAINAGE SYSTEM NO.
		CY	LF	SQYD	EA	LF	LF	EA	LF	LF	EA	CY	EA	EA	CY	CY	SY	(EA)	(EA)	(EA)	LB	LF		LF	LF				
1	a			65																						HMA DITCH	"RL3" 564+65.50 – 565+32.68	a	1
	b															7.7	16.1									RSP APRON	"RL3" 564+65.50	b	
	c				1																					18" CONCRETE FES	"RL3" 565+32.68	c	
	d					158																	S			18" APC	"RL3" 565+24.53 – 566+64.94	d	
	e											1.31	1	1							124.20	5.2				GRATE TYPE 24–12X	"RL3" 566+64.94	e	
	f					10																	S			18" HDPE TYPE S	"RL3" 566+65.00 – 566+75.00	f	
	g											1.22	1	1							115.44	5.5				GRATE TYPE 24–12X	"RL3" 566+75.00	g	
	h					10																	S			18" HDPE TYPE S	"RL3" 566+75.00 – 566+85.00	h	
	i											1.17	1	1							110.40	5.2				GRATE TYPE 24–12X	566+85.05	i	
2	j						6.8						1	1								5.8				GCP INLET	"RL3" 571+22.99	j	2
	k								9.5																	6" HDPE	"RL3" 571+13.29 – 571+22.99	k	
	l							1					1	1								18.9		18		60" SDMH	"RL3" 571+13.29	l	
	m														17.6		70.1									RSP	"RL3" 571+82.20 – 572+78.79	m	
	n									13.0																24" CORRUGATED STEEL PIPE	"RL3" 571+13.29 – 571+19.80	n	
	o																	1								CONNECT TO EXIST PIPE	"RL3" 571+19.80	o	
3	p						6.9						1	1								6.9				GCP INLET	"HW 50" 560+81.59	p	3
	q																			2						PAID UNDER REMOVE CULVET	"HW 50" 562+57.81	q	
	r																		8							PAID UNDER REMOVE CULVERT	"HW 50" 562+57.81 – 563+56.81	r	
	s		130																						3	REMOVE DUAL PIPE CULVERT	"HW 50" 562+57.81 – 563+56.81	s	
	u			100																						HMA DITCH	"RL3" 563+23.73 – 564+32.87	u	
	v	56																								REMOVE AND SALVAGE RSP & ROCK	"HW 50" 562+52.53 – 563+67.52	v	
	w															7.7	16									RSP APRON	"RL3" 564+32.87	w	
	x										1															WATER QUALITY OUTLET	"HW 50" 562+58	x	
TOTAL		56	130	165	1	178	13.7		9.5	13.0	1	3.7	6	6	17.6	15.6	103	1	8	2	350.04			18					

DRAINAGE QUANTITIES

DQ-1

REVISED BY	DATE REVISED
VERONICA GARCIA-MCGREW	AARON S. BRUSATORI

CALCULATED-DESIGNED BY	CHECKED BY

CONSULTANT FUNCTIONAL SUPERVISOR: AARON BRUSATORI, PE

STATE OF CALIFORNIA – DEPARTMENT OF TRANSPORTATION

LAST REVISION — DATE PLOTTED => 10/14/2020 TIME PLOTTED => 11:31 AM

Dist	COUNTY	ROUTE	POST MILES TOTAL PROJECT	SHEET No.	TOTAL SHEETS
03	ED	50	16.4/16.8	25	45

REGISTERED CIVIL ENGINEER — DATE 8-07-20

AUGUST 31, 2020
PLANS APPROVAL DATE

REGISTERED PROFESSIONAL ENGINEER — AARON BRUSATORI — No. 64384 — Exp. 6/30/21 — CIVIL — STATE OF CALIFORNIA

THE STATE OF CALIFORNIA OR ITS OFFICERS OR AGENTS SHALL NOT BE RESPONSIBLE FOR THE ACCURACY OR COMPLETENESS OF SCANNED COPIES OF THIS PLAN SHEET.

R.E.Y. ENGINEERS
905 SUTTER STREET, SUITE 200
FOLSOM, CA 95630

CITY OF PLACERVILLE
ENGINEERING DEPARTMENT
3101 CENTER STREET
PLACERVILLE, CA 95667

NOTE:

1. THIS PLAN IS ACCURATE FOR CONSTRUCTION AREA SIGNS ONLY.
2. SIGN LOCATIONS SHOWN ARE APPROXIMATE. EXACT LOCATIONS WILL BE DETERMINED BY THE ENGINEER.
3. SIGN POST LENGTH ARE APPROXIMATE, EXACT SIZE AND LENGTH WILL BE DETERMINED BY THE ENGINEER.
4. FOR ADDITIONAL CONSTRUCTION AREA SIGNS, SEE SHEET TH-1.

LEGEND:

– TEMP CONSTRUCTION AREA SIGN

(X) – SIGN NUMBER

STATIONARY MOUNTED CONSTRUCTION AREA SIGNS

SIGN NO.	SIGN CODE		SIGN MESSAGE	PANEL SIZE (INCHES)	NO. & SIZE OF POSTS (INCHES)	NO. SIGNS
	FEDERAL	CALIFORNIA				
(A)	W20-1	–	ROAD WORK AHEAD	60 X 60	2 – 4 X 6	4
(B)	G20-2	-	END ROAD WORK	48 X 24	1 – 4 X 6	3
(C)	-	C40A(CA)	TRAFFIC FINES DOUBLED IN WORK ZONES	48 X 48	1 – 4 X 6	1

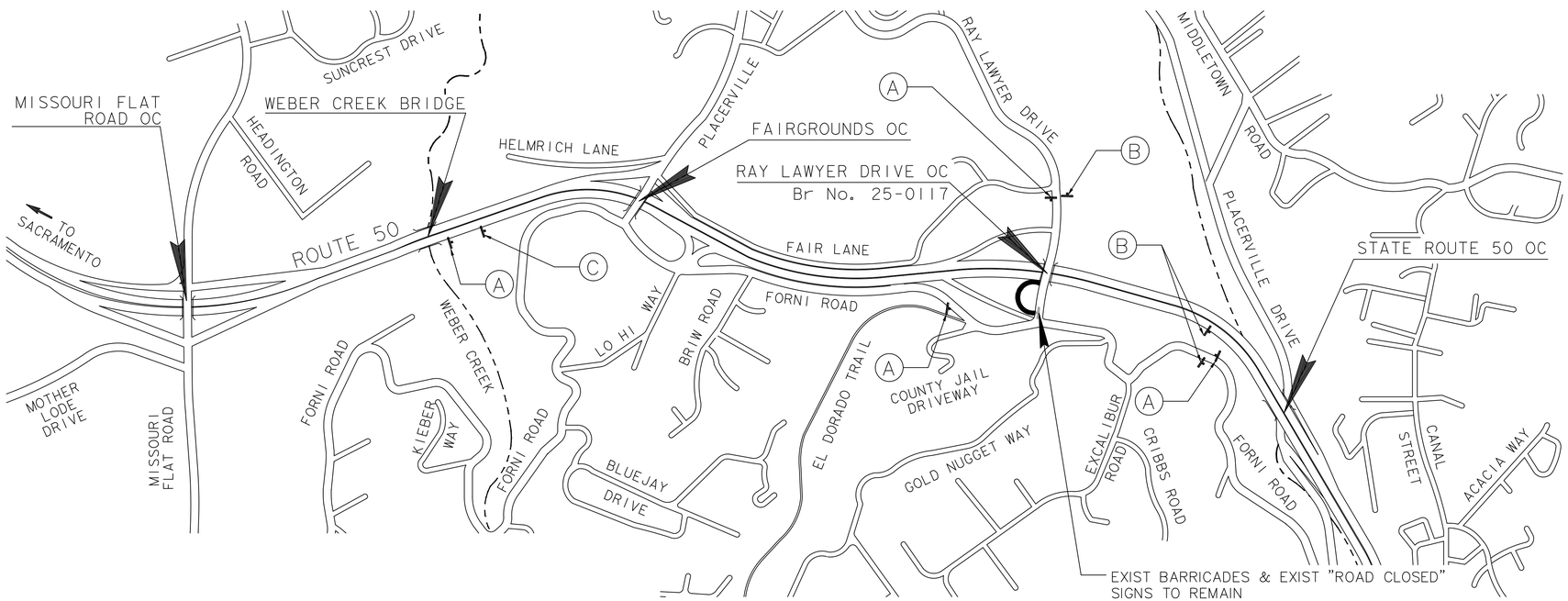

APPROVED FOR CONSTRUCTION AREA SIGN WORK ONLY

CONSTRUCTION AREA SIGN PLAN

NO SCALE

CS-1

STATE OF CALIFORNIA – DEPARTMENT OF TRANSPORTATION
Caltrans

CONSULTANT FUNCTIONAL SUPERVISOR: AARON BRUSATORI, PE

CALCULATED-DESIGNED BY: VERONICA GARCIA-MCGREW
CHECKED BY: AARON S. BRUSATORI

REVISED BY
DATE REVISED

LAST REVISION
DATE PLOTTED => 10/14/2020
TIME PLOTTED => 11:31 AM

BORDER LAST REVISED 7/2/2010
USERNAME => VGMCGREW
CAD FILE => 6884.009 TRAFFIC AND SIGNS.DWG
RELATIVE BORDER SCALE IS IN INCHES 0 1 2 3
UNIT
PROJECT NUMBER & PHASE 03190001521

Dist	COUNTY	ROUTE	POST MILES TOTAL PROJECT	SHEET No.	TOTAL SHEETS
03	ED	50	16.4/16.8	26	45

REGISTERED CIVIL ENGINEER — DATE: 8-07-20

AUGUST 31, 2020
PLANS APPROVAL DATE

REGISTERED PROFESSIONAL ENGINEER — AARON BRUSATORI — No. 64384 — Exp. 6/30/21 — CIVIL — STATE OF CALIFORNIA

THE STATE OF CALIFORNIA OR ITS OFFICERS OR AGENTS SHALL NOT BE RESPONSIBLE FOR THE ACCURACY OR COMPLETENESS OF SCANNED COPIES OF THIS PLAN SHEET.

R.E.Y. ENGINEERS
905 SUTTER STREET, SUITE 200
FOLSOM, CA 95630

CITY OF PLACERVILLE
ENGINEERING DEPARTMENT
3101 CENTER STREET
PLACERVILLE, CA 95667

NOTE:

1. SEE CONSTRUCTION AREA SIGNS SHEETS CS-1 FOR MORE SIGNS.
2. ANCHOR K-RAIL WHEN CLEAR SPACE BEHIND IT IS LESS THAN 24".
3. STATION-OFFSET CALLOUTS ON TRAFFIC HANDLING PLAN SHEETS REFER TO "HW-50" LINE ONLY.

LEGEND:

- TEMPORARY RAILING (TYPE K)
- DIRECTION OF TRAFFIC
- TEMP CONSTRUCTION SIGN
- TEMPORARY CRASH CUSHION (ARRAY 'TS14')
- PLASTIC TRAFFIC DRUM

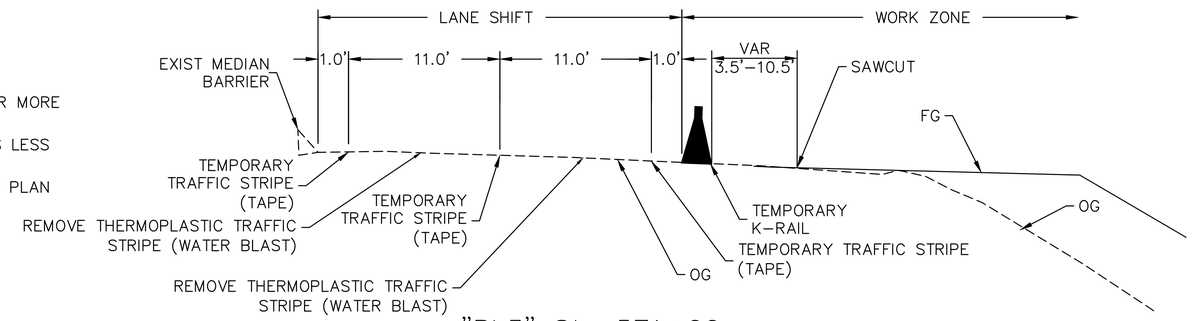

"RL3" Sta 571+00
NO SCALE

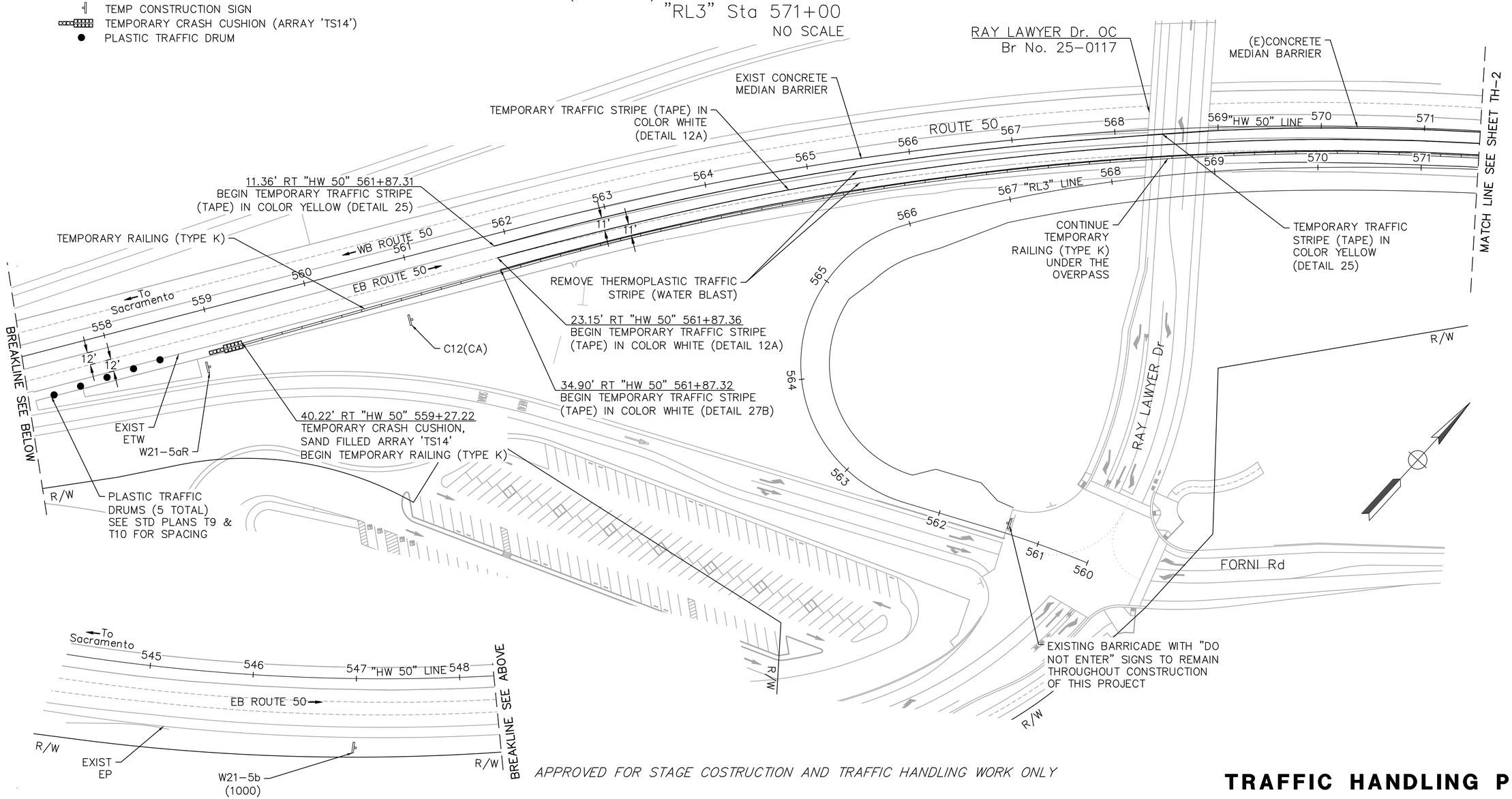

APPROVED FOR STAGE COSTRUCTION AND TRAFFIC HANDLING WORK ONLY

TRAFFIC HANDLING PLAN

SCALE: 1"=50'

TH-1

STATE OF CALIFORNIA – DEPARTMENT OF TRANSPORTATION

Caltrans

CONSULTANT FUNCTIONAL SUPERVISOR: AARON BRUSATORI, PE

CALCULATED-DESIGNED BY: VERONICA GARCIA-MCGREW — CHECKED BY: AARON S. BRUSATORI

REVISED BY — DATE REVISED

LAST REVISION — DATE PLOTTED => 10/14/2020 TIME PLOTTED => 11:31 AM

Dist	COUNTY	ROUTE	POST MILES TOTAL PROJECT	SHEET No.	TOTAL SHEETS
03	ED	50	16.4/16.8	27	45

REGISTERED CIVIL ENGINEER — DATE 8-07-20

AUGUST 31, 2020
PLANS APPROVAL DATE

REGISTERED PROFESSIONAL ENGINEER — AARON BRUSATORI — No. 64384 — Exp. 6/30/21 — CIVIL — STATE OF CALIFORNIA

THE STATE OF CALIFORNIA OR ITS OFFICERS OR AGENTS SHALL NOT BE RESPONSIBLE FOR THE ACCURACY OR COMPLETENESS OF SCANNED COPIES OF THIS PLAN SHEET.

R.E.Y. ENGINEERS
905 SUTTER STREET, SUITE 200
FOLSOM, CA 95630

CITY OF PLACERVILLE
ENGINEERING DEPARTMENT
3101 CENTER STREET
PLACERVILLE, CA 95667

NOTE:

1. SEE CONSTRUCTION AREA SIGNS SHEETS CS-1 FOR MORE SIGNS.
2. ANCHOR K-RAIL WHEN CLEAR SPACE BEHIND IT IS LESS THAN 24".
3. STATION-OFFSET CALLOUTS ON TRAFFIC HANDLING PLAN SHEETS REFER TO "HW-50" LINE ONLY.

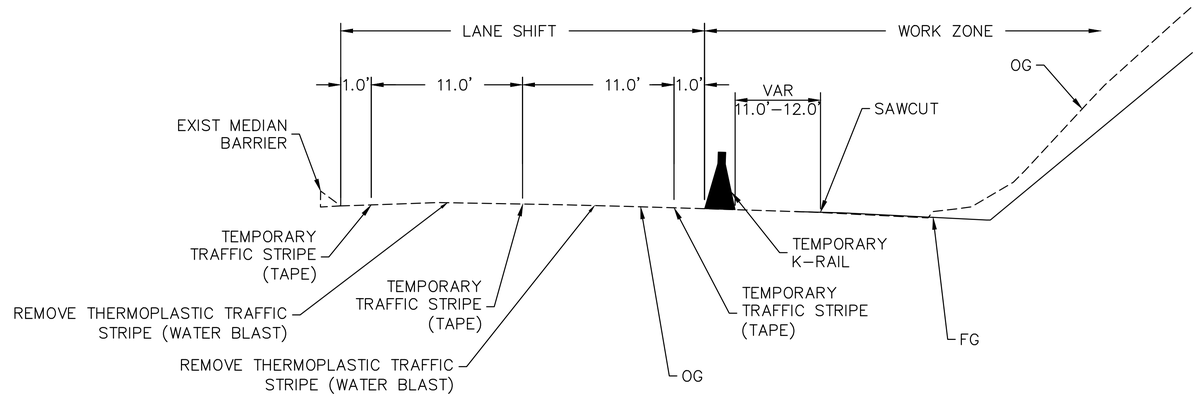

"RL3" LINE Sta: 577+00
NO SCALE

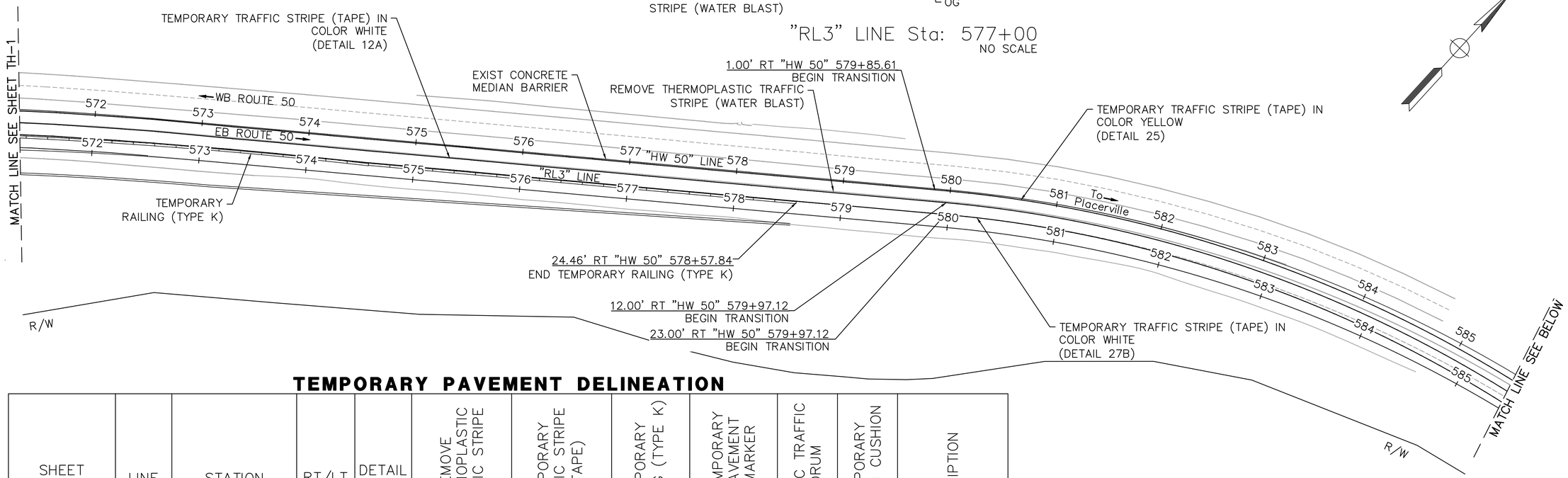

TEMPORARY PAVEMENT DELINEATION

SHEET NUMBER	LINE	STATION	RT/LT	DETAIL NO.	REMOVE THERMOPLASTIC TRAFFIC STRIPE (LF)	TEMPORARY TRAFFIC STRIPE (TAPE) (LF)	TEMPORARY RAILING (TYPE K) (LF)	TEMPORARY PAVEMENT MARKER G (EA)	TEMPORARY PAVEMENT MARKER RY (EA)	PLASTIC TRAFFIC DRUM EA	TEMPORARY CRASH CUSHION (EA)	DESCRIPTION
TH-1 – TH-2	"HW 50"	561+87.36 – 588+26.49	RT	12A	2625	2625		55				WATER BLAST
TH-1 – TH-2	"HW 50"	561+87.31 – 588+26.49	RT	25	2635	2635			55			WATER BLAST
TH-1 – TH-2	"HW 50"	559+27.22 – 578+57.84	RT				1918					TYPE K
TH-1 – TH-2	"HW 50	561+87.32 – 588+26.49	RT	27B	2612	2612						WATER BLAST
TH-1	"HW 50"	557+38.54 – 558+46.30	RT							5		
TH-1	"HW 50"	559+27.22	RT								1	SAND FILLED ARRAY 'TS14'

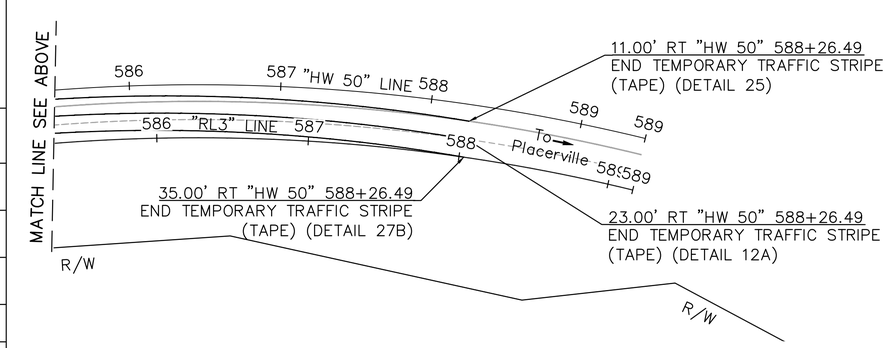

APPROVED FOR STAGE COSTRUCTION AND TRAFFIC HANDLING WORK ONLY

TRAFFIC HANDLING PLAN

SCALE: 1"=50'

TH-2

STATE OF CALIFORNIA – DEPARTMENT OF TRANSPORTATION
Caltrans

CONSULTANT FUNCTIONAL SUPERVISOR: AARON BRUSATORI, PE
CALCULATED-DESIGNED BY: VERONICA GARCIA-MCGREW
CHECKED BY: AARON S. BRUSATORI
REVISED BY
DATE REVISED

DATE PLOTTED => 10/14/2020
TIME PLOTTED => 11:31 AM
LAST REVISION

Dist	COUNTY	ROUTE	POST MILES TOTAL PROJECT	SHEET No.	TOTAL SHEETS
03	ED	50	16.4/16.8	28	45

REGISTERED CIVIL ENGINEER — DATE: 8-07-20

AUGUST 31, 2020
PLANS APPROVAL DATE

REGISTERED PROFESSIONAL ENGINEER — AARON BRUSATORI — No. 64384 — Exp. 6/30/21 — CIVIL — STATE OF CALIFORNIA

THE STATE OF CALIFORNIA OR ITS OFFICERS OR AGENTS SHALL NOT BE RESPONSIBLE FOR THE ACCURACY OR COMPLETENESS OF SCANNED COPIES OF THIS PLAN SHEET.

R.E.Y. ENGINEERS
905 SUTTER STREET, SUITE 200
FOLSOM, CA 95630

CITY OF PLACERVILLE
ENGINEERING DEPARTMENT
3101 CENTER STREET
PLACERVILLE, CA 95667

NOTE:

1. FOR ACCURATE RIGHT OF WAY DATA, CONTACT RIGHT OF WAY ENGINEERING AT THE DISTRICT OFFICE.
2. SEE SHEET E-5 FOR SIGN CHANGES ON EXISTING MAST ARMS AT RAY LAWYER DRIVE INTERSECTION

LEGEND:

- (XX) – PAVEMENT DELINEATION DETAIL
- (XX) – ROADSIDE SIGN No.
- – BEGIN/END PAVEMENT DELINEATION DETAIL
- –CHANGE IN PAVEMENT DELINEATION DETAIL
- –ROADSIDE SIGN (TWO POSTS)
- –ROADSIDE SIGN (ONE POST)
- – ROADSIDE SIGN ON TYPE 1B POLE
- – OBJECT MARKER
- G –GUARD RAILING DELINEATOR (TYPE G)
- F –DELINEATOR (CLASS 1) TYPE F
- ELECTROLIER PER ELECTRICAL SHEET E-4
- 1-D POLE PER ELECTRICAL SHEET E-2
- ▲ RESET ROADSIDE SIGN
- ■ REMOVE ROADSIDE SIGN

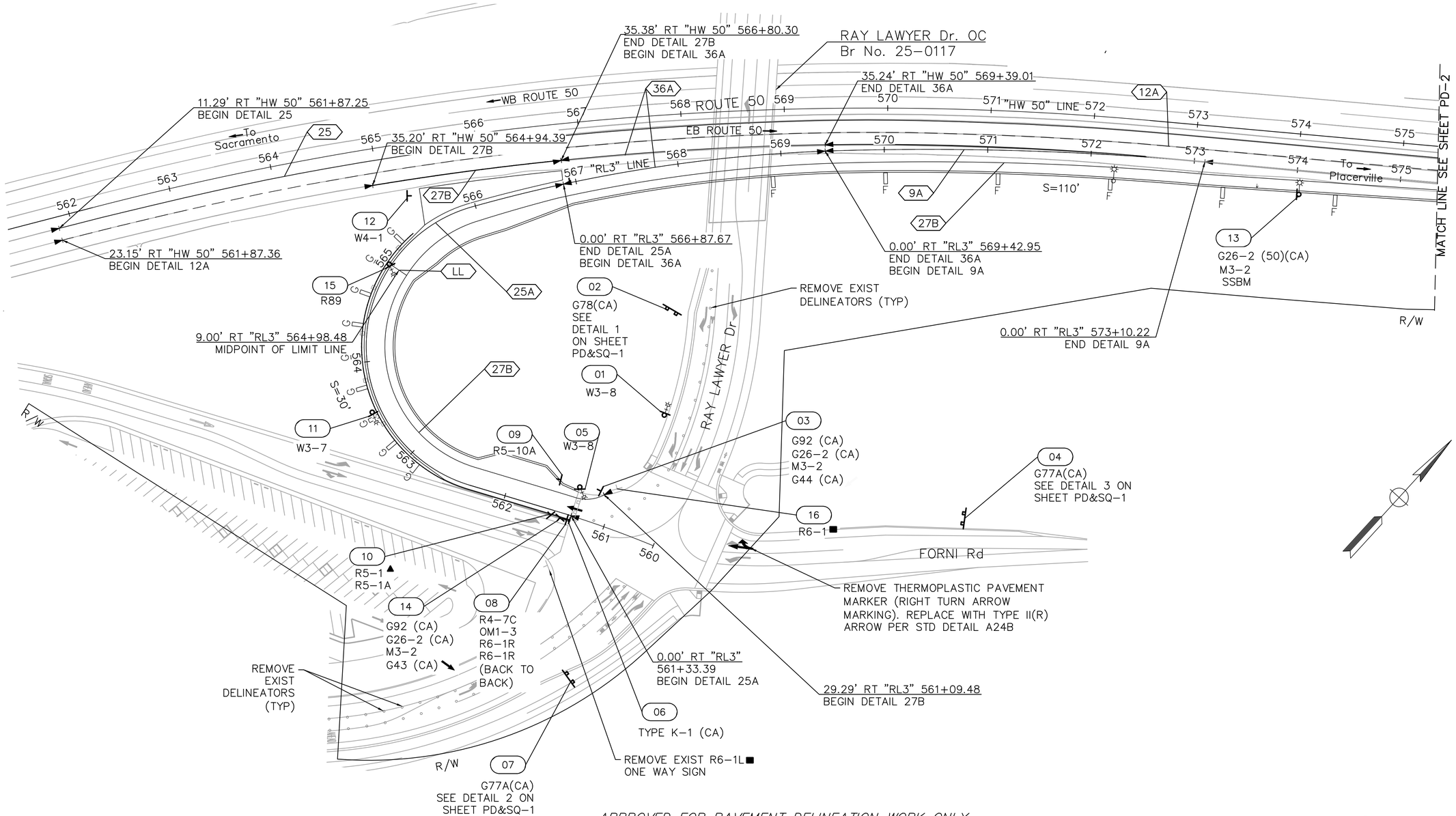

APPROVED FOR PAVEMENT DELINEATION WORK ONLY

PAVEMENT DELINEATION & SIGNS

SCALE: 1" = 50'

PD-1

REVISED BY	DATE REVISED
VERONICA GARCIA-MCGREW	AARON S. BRUSATORI

CALCULATED-DESIGNED BY	CHECKED BY

CONSULTANT FUNCTIONAL SUPERVISOR — AARON BRUSATORI, PE

STATE OF CALIFORNIA – DEPARTMENT OF TRANSPORTATION — Caltrans

LAST REVISION — DATE PLOTTED => 10/14/2020 TIME PLOTTED => 11:31 AM

Dist	COUNTY	ROUTE	POST MILES TOTAL PROJECT	SHEET No.	TOTAL SHEETS
03	ED	50	16.4/16.8	29	45

REGISTERED CIVIL ENGINEER — DATE: 8-07-20

AUGUST 31, 2020
PLANS APPROVAL DATE

REGISTERED PROFESSIONAL ENGINEER — AARON BRUSATORI — No. 64384 — Exp. 6/30/21 — CIVIL — STATE OF CALIFORNIA

THE STATE OF CALIFORNIA OR ITS OFFICERS OR AGENTS SHALL NOT BE RESPONSIBLE FOR THE ACCURACY OR COMPLETENESS OF SCANNED COPIES OF THIS PLAN SHEET.

R.E.Y. ENGINEERS
905 SUTTER STREET, SUITE 200
FOLSOM, CA 95630

CITY OF PLACERVILLE
ENGINEERING DEPARTMENT
3101 CENTER STREET
PLACERVILLE, CA 95667

NOTE:

1. FOR ACCURATE RIGHT OF WAY DATA, CONTACT RIGHT OF WAY ENGINEERING AT THE DISTRICT OFFICE.
2. SEE SHEET E-5 FOR SIGN CHANGES ON EXISTING MAST ARMS AT RAY LAWYER DRIVE INTERSECTION

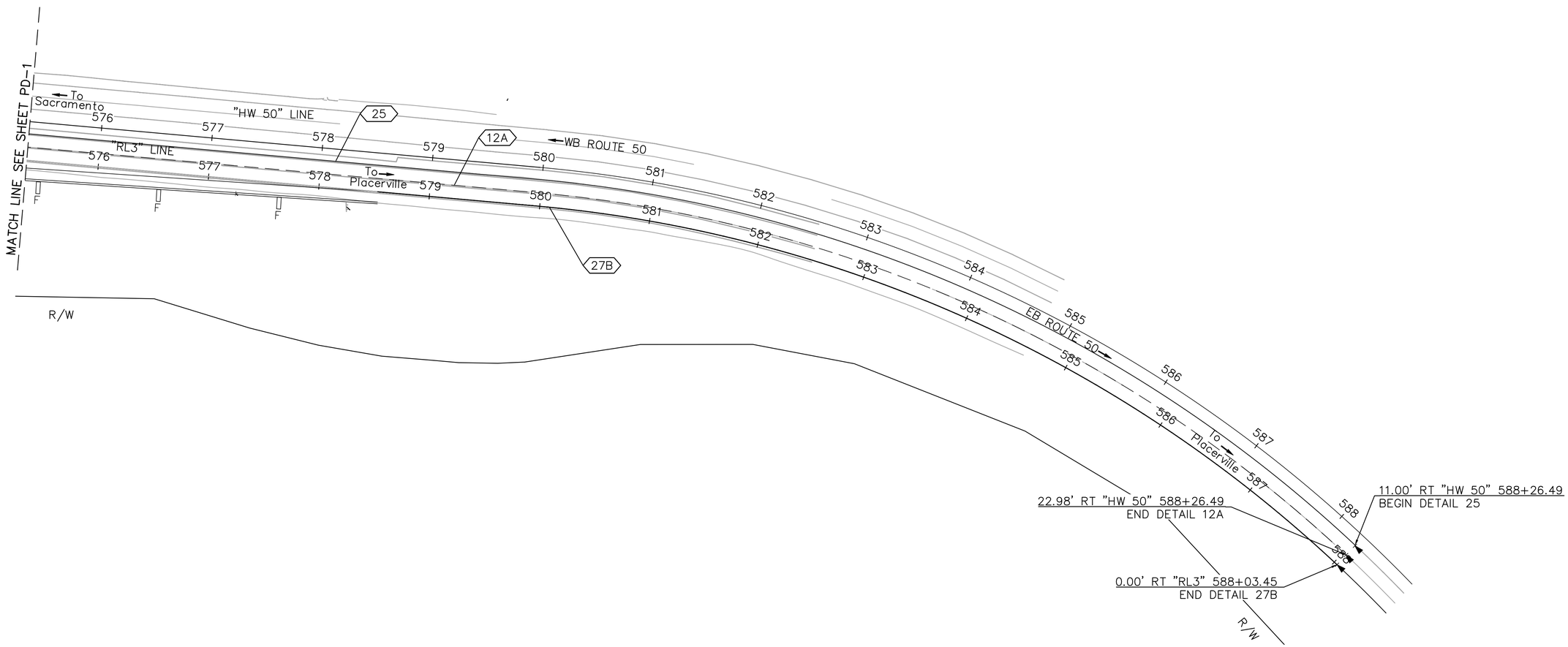

APPROVED FOR PAVEMENT DELINEATION WORK ONLY

PAVEMENT DELINEATION & SIGNS

SCALE: 1" = 50'

PD-2

STATE OF CALIFORNIA – DEPARTMENT OF TRANSPORTATION
Caltrans

CONSULTANT FUNCTIONAL SUPERVISOR: AARON BRUSATORI, PE
CALCULATED-DESIGNED BY: VERONICA GARCIA-MCGREW
CHECKED BY: AARON S. BRUSATORI
REVISED BY
DATE REVISED

LAST REVISION
DATE PLOTTED => 10/14/2020
TIME PLOTTED => 11:31 AM

Dist	COUNTY	ROUTE	POST MILES TOTAL PROJECT	SHEET No.	TOTAL SHEETS
03	ED	50	16.4/16.8	30	45

REGISTERED CIVIL ENGINEER — DATE 8-07-20

AUGUST 31, 2020
PLANS APPROVAL DATE

REGISTERED PROFESSIONAL ENGINEER — AARON BRUSATORI — No. 64384 — Exp. 6/30/21 — CIVIL — STATE OF CALIFORNIA

THE STATE OF CALIFORNIA OR ITS OFFICERS OR AGENTS SHALL NOT BE RESPONSIBLE FOR THE ACCURACY OR COMPLETENESS OF SCANNED COPIES OF THIS PLAN SHEET.

R.E.Y. ENGINEERS
905 SUTTER STREET, SUITE 200
FOLSOM, CA 95630

CITY OF PLACERVILLE
ENGINEERING DEPARTMENT
3101 CENTER STREET
PLACERVILLE, CA 95667

STRIPING QUANTITIES

REMARKS	SHEET NUMBER	LINE	STATION	RT/LT	DETAIL NO.	THERMOPLASTIC TRAFFIC STRIPE (EWNV)			PAVEMENT MARKER (RETROREFLECTIVE-RECESSED)		DELINEATORS		REMOVE DELINEATORS	REMOVE THERMOPLASTIC PAVEMENT MARKING	THERMOPLASTIC PAVEMENT MARKING (EWNV)	DESCRIPTION
						6 IN WHITE	6 IN YELLOW	8 IN WHITE	TYPE C	TYPE RY	CLASS 1	GUARD RAILING				
						(LF)	(LF)	(LF)	(EA)	(EA)	(EA)	(EA)	(EA)	(SQFT)	(SQFT)	
	PD-1 / PD-2	"HW 50"	561+87.25 TO 588+26.49	RT	25		2628			56						
	PD-1 / PD-2	"HW 50"	561+87.36 TO 588+26.49	RT	12A	2616			55							
	PD-1	"RL3"	562+91 TO 565+22	LT								9				TYPE G
	PD-1	"RL3"	FORNI RD ON WB LEG	RT										42	45	TYPE II (R) ARROW
	PD-1	"RL3"	561+33.39 TO 566+87.67	RT/LT	25A		555			35						
	PD-1 / PD-2	"RL3"	561+09.48 TO 588+26.49	RT	27B	2649										
	PD-1	"RL3"	561+24.74 TO 561+48.57	RT											31	TYPE I (24') ARROW
	PD-1	"RL3"	564+98.48	RT											18	LIMIT LINE
	PD-1	"HW 50"	564+94.39 TO 566+80.30	RT	27B	184										
	PD-1	"HW 50"	566+80.30 TO 569+39.01	RT	36A			256	11							
	PD-1	"RL3"	566+87.67 TO 569+42.95	RT/LT	36A			256	11							
	PD-1 / PD-2	"HW 50"	568+87 TO 577+65	RT							9					TYPE F
	PD-1	"RL3"	569+42.95 TO 573+10.22	RT	9A	368			8							
	PD-1	"RL3"	560+50	RT/LT									45			REMOVE DELINEATORS ON RAY LAWYER DR AND FORNI RD
	TOTAL					5817	3183	512	85	91	9	9	45	42	94	

PAVEMENT DELINEATION QUANTITIES

PDQ-1

REVISED BY	DATE REVISED
VERONICA GARCIA-MCGREW	AARON S. BRUSATORI

CALCULATED-DESIGNED BY
CHECKED BY

CONSULTANT FUNCTIONAL SUPERVISOR
AARON BRUSATORI, PE

STATE OF CALIFORNIA – DEPARTMENT OF TRANSPORTATION
Caltrans

LAST REVISION — DATE PLOTTED => 10/14/2020 TIME PLOTTED => 11:31 AM

Dist	COUNTY	ROUTE	POST MILES TOTAL PROJECT	SHEET No.	TOTAL SHEETS
03	ED	50	16.4/16.8	31	45

REGISTERED CIVIL ENGINEER — DATE: 8-07-20

AUGUST 31, 2020
PLANS APPROVAL DATE

REGISTERED PROFESSIONAL ENGINEER — AARON BRUSATORI — No. 64384 — Exp. 6/30/21 — CIVIL — STATE OF CALIFORNIA

THE STATE OF CALIFORNIA OR ITS OFFICERS OR AGENTS SHALL NOT BE RESPONSIBLE FOR THE ACCURACY OR COMPLETENESS OF SCANNED COPIES OF THIS PLAN SHEET.

R.E.Y. ENGINEERS
905 SUTTER STREET, SUITE 200
FOLSOM, CA 95630

CITY OF PLACERVILLE
ENGINEERING DEPARTMENT
3101 CENTER STREET
PLACERVILLE, CA 95667

NOTE:

1. EXACT LOCATION AND POSITION OF ROADSIDE SIGNS TO BE DETERMINED BY THE ENGINEER.
2. POST LENGTHS GIVEN ARE APPROXIMATE.
3. "C" DIM=VERTICAL
4. SIGN NUMBERS DESIGNATED BY (a) CORRESPOND TO MAST ARM POSTS ON SHEET E-5.

ROADSIDE SIGN QUANTITIES

SHEET NO.	SIGN NO.	SIGN CODE		PANEL SIZE		FURNISH SINGLE SHEET ALUMINUM SIGN	C' DIM	POST SIZE AND LENGTH			ROADSIDE SIGN		INSTALL SIGN (STRAP & SADDLE BRACKET METHOD)	RESET ROADSIDE SIGN	REMOVE ROADSIDE SIGN	REMARKS
				HORIZ	VERT			4" X 4"	4" X 6"	6" X 6"	ONE POST	TWO POST				
		FEDERAL	CALIFORNIA	IN X IN		SQFT	FT	FT			EA	EA	EA	EA		
	01	W3-8		36	36	9	7				1					MOUNT ON FLASHING BEACON
	02		G78(CA)	120	48	40				16		1				
	03		G92 (CA)	48	30	10	2		14		1					
			G26-1 (CA)	28	24	4.66										
		M3-2		24	12	2										
			G44(CA)	21	15	1.25										
	04		G77A(CA)	90	90	56.25	7			14		1				
	05	W3-8		36	36	9	7				1					MOUNT ON ELECTROLIER
	06	OM2-1H		12	6	0.5	4									INSTALL ON FLEXIBLE POST
	07		G77A(CA)	90	90	56.25	7			14		1				
	8	R4-7C		18	30	3.75	4	12			1					
		OM 1-3		18	18	2.25										
		R6-1R		36	12	3										R6-1 SIGNS TO BE BACK TO BACK
		R6-1R		36	12	3										
	09	R5-10A		30	36	7.5	5	10			1					
	10	R5-1		36	36	-								1		DO NOT ENTER, WRONG WAY SIGNS ARE EXISTING. TO BE REMOVED DURING CONSTRUCTION OF CONCRETE MEDIAN AND RESET IN THEIR ORIGINAL LOCATION.
		R5-1A		36	24	-	2									
	11	W3-7		36	36	9	7				1					MOUNT ON FLASHING BEACON
	12	W4-1		36	36	9	7			18	1					
	13		G26-2(50)(CA)	30	30	6.25							1			MOUNT ON FLASHING BEACON
		M3-2		30	15	3.13										
	14		G92 (CA)	48	30	10	2		14		1					
			G26-1 (CA)	28	24	4.66										
		M3-2		24	12	2										
			G43(CA)	21	15	2.19										
	15	R89		24	6	12		12			1					
	16	R6-1		36	12	-									1	REMOVE EXIST R6-1
E-5	(a)		R61-5.1(CA)	36	30	7.50									1	REMOVE EXISTING R61-19(CA) SIGN AND MOUNT NEW SIGN ON MAST ARM
E-5	(d)		R73-3(CA)	24	24	4.00									1	REMOVE EXISTING R3-18 SIGN AND MOUNT NEW SIGN ON MAST ARM
TOTAL						271.15					9	3	1	1	3	

APPROVED FOR CONSTRUCTION AREA SIGN WORK ONLY

SIGN QUANTITIES
SQ-1

REVISED BY	DATE REVISED
VERONICA GARCIA-MCGREW	AARON S. BRUSATORI
CALCULATED-DESIGNED BY	CHECKED BY
CONSULTANT FUNCTIONAL SUPERVISOR	AARON BRUSATORI, PE

STATE OF CALIFORNIA - DEPARTMENT OF TRANSPORTATION — Caltrans

LAST REVISION — DATE PLOTTED => 10/14/2020 TIME PLOTTED => 11:31 AM

Dist	COUNTY	ROUTE	POST MILES TOTAL PROJECT	SHEET No.	TOTAL SHEETS
03	ED	50	16.4/16.8	32	45

REGISTERED CIVIL ENGINEER — DATE 8-07-20

AUGUST 31, 2020
PLANS APPROVAL DATE

REGISTERED PROFESSIONAL ENGINEER — AARON BRUSATORI — No. 64384 — Exp. 6/30/21 — CIVIL — STATE OF CALIFORNIA

THE STATE OF CALIFORNIA OR ITS OFFICERS OR AGENTS SHALL NOT BE RESPONSIBLE FOR THE ACCURACY OR COMPLETENESS OF SCANNED COPIES OF THIS PLAN SHEET.

R.E.Y. ENGINEERS
905 SUTTER STREET, SUITE 200
FOLSOM, CA 95630

CITY OF PLACERVILLE
ENGINEERING DEPARTMENT
3101 CENTER STREET
PLACERVILLE, CA 95667

DETAIL 1: SIGN G78-4(CA)

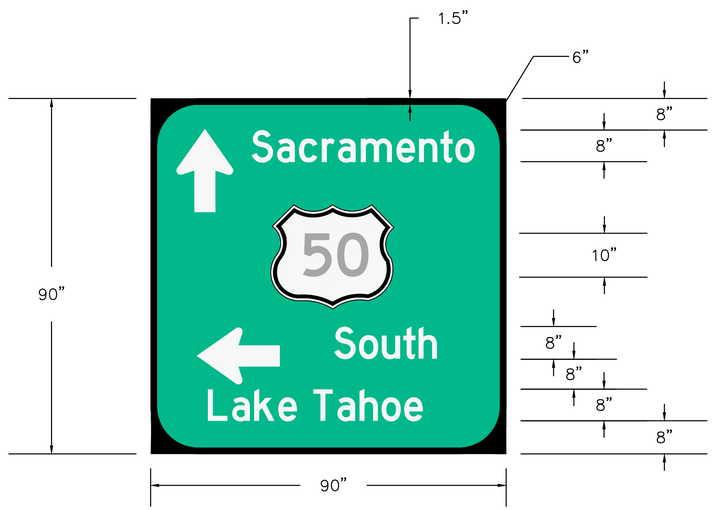

DETAIL 2: SIGN G77A(CA)

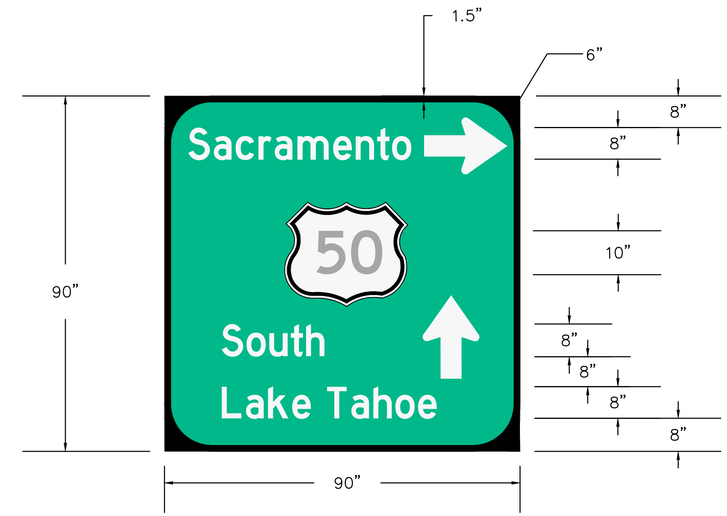

DETAIL 3: SIGN G77A(CA)

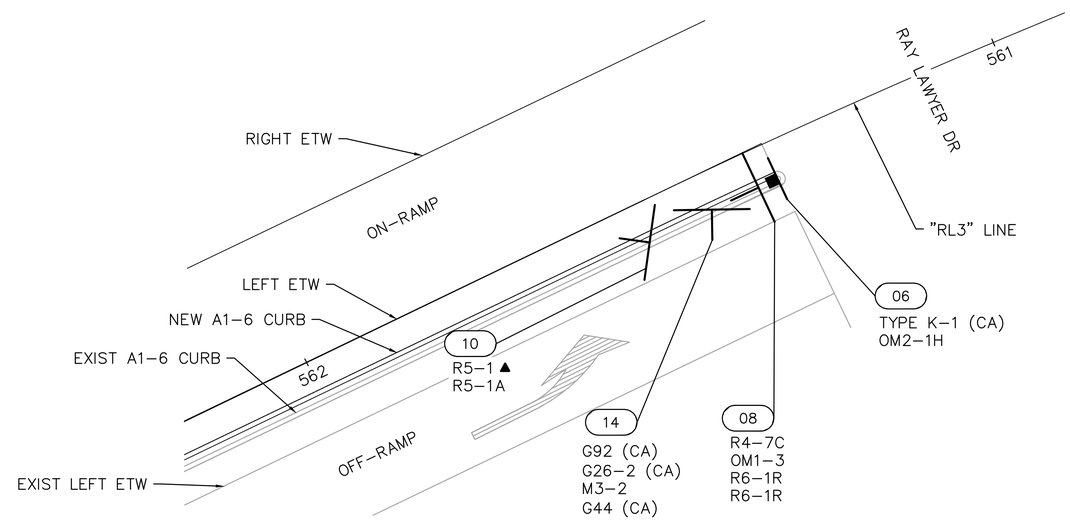

DETAIL 4: SIGNS IN MEDIAN
SCALE: 1"=10'

PAVEMENT DELINEATION & SIGN DETAILS

NO SCALE

PD & SD-1

REVISED BY	DATE REVISED
VERONICA GARCIA-MCGREW	AARON S. BRUSATORI

CALCULATED-DESIGNED BY	CHECKED BY

CONSULTANT FUNCTIONAL SUPERVISOR: AARON BRUSATORI, PE

STATE OF CALIFORNIA - DEPARTMENT OF TRANSPORTATION — Caltrans

LAST REVISION — RAIF PLOTTED => 10/14/2020 TIME PLOTTED => 11:32 AM

Dist	COUNTY	ROUTE	POST MILES TOTAL PROJECT	SHEET No.	TOTAL SHEETS
03	ED	50	16.4/16.8	33	45

REGISTERED CIVIL ENGINEER — DATE 8-07-20

AUGUST 31, 2020
PLANS APPROVAL DATE

REGISTERED PROFESSIONAL ENGINEER — AARON BRUSATORI — No. 64384 — Exp. 6/30/21 — CIVIL — STATE OF CALIFORNIA

THE STATE OF CALIFORNIA OR ITS OFFICERS OR AGENTS SHALL NOT BE RESPONSIBLE FOR THE ACCURACY OR COMPLETENESS OF SCANNED COPIES OF THIS PLAN SHEET.

R.E.Y. ENGINEERS
905 SUTTER STREET, SUITE 200
FOLSOM, CA 95630

CITY OF PLACERVILLE
ENGINEERING DEPARTMENT
3101 CENTER STREET
PLACERVILLE, CA 95667

AGGREGATE BASE (CLASS 2)

SHEET NUMBER	LINE	STATION	SQFT (N)	CUFT (N)	CUYD
L-1/L-2	"RL3"	561+50.54 – 578+53.66	47,464	68,823	2,549
L-1	"BR"	1+04.32 – 2+82.74	2,061	687	26

HOT MIX ASPHALT (TYPE A)

SHEET NUMBER	LINE	STATION	SQFT (N)	TON
L-1/L-2	"RL3"	561+33.39 – 578+53.66	50,164	1,256
D-1	"RL3"	563+27.73 – 564+32.87	900	22
D-2	"RL3"	544+65.50 – 565+32.68	585	14

PLACE HOT MIX ASPHALT (MISCELLANEOUS AREAS)

SHEET NUMBER	LINE	STATION	SQFT (N)	SQYD	NOTES
L-1	"RL3"	565+48.31 – 566+88.73	2,596	289	HMA (TEXTURED PAVING)
D-1	SEE SHEET DQ-1 FOR HMA DITCH QUANTITIES				

COLD PLANE ASPHALT CONCRETE PAVEMENT

SHEET NUMBER	LINE	STATION	SQFT (N)	SQYD
L-1/L-2	"RL3"	565+35.40 – 578+53.66	2,700	300

EARTHWORK

LINE	ROADWAY EXCAVATION	REMOVE BASE AND SURFACING	EXPORT
	CY	CY	CY
RL3	32,748	898	17,606

EARTHWORK (N)

LINE	ROADWAY EXCAVATION	
	CY	
	CUT	FILL
RL3 Sta 561+33 – 570+20	22,830	3,500
RL3 Sta 570+20 – 573+60	0	11,642
RL3 Sta 573+60 – 577+70	9,918	0

WATER POLLUTION CONTROL QUANTITIES

TEMPORARY HYDRAULIC MULCH	TEMPORARY DRAINAGE INLET PROTECTION	STABILIZED CONSTRUCTION ENTRANCE	SHEET
SQYD	EA	EA	
14,050	7	3	WPC-1 / WPC-2

PLACE HMA DIKE

SHEET NUMBER	LINE	RT/LT	STATION	TYPE D	TYPE A
				(LF)	(LF)
L-1	"RL3"	RT	561+33.39 – 570+02.00	804	
L-1 / L-2	"RL3"	RT	570+02.00 – 573+29.16		326
L-2	"RL3"	RT	573+29.16 – 578+53.78	523	

MISCELLANEOUS ITEMS

SHEET NUMBER	LINE	RT/LT	STATION	TEMPORARY FENCE (TYPE ESA)	SUBGRADE ENHANCEMENT GEOGRID	REMOVE TREE
				(LF)	(SQYD)	(EA)
CG-1	"RL3"	RT	569+50.16 – 571+49.00	310		
CG-2	"RL3"	RT	572+25.85 – 573+89.29	208		
CG-2	"RL3"	RT	576+28.75 – 577+65.30	161		
L-1	"BR"	LT	1+04.32 – 2+82.74		214	
L-1 / L-2	–	–	–			80

MINOR CONCRETE (CURB)

SHEET NUMBER	LINE	RT/LT	STATION	TYPE A1-6
				(LF)
L-1	"RL3"	LT	561+33.39 – 562+60.00	128

MIDWEST GUARDRAIL SYSTEM

SHEET NUMBER	LINE	RT/LT	STATION	MIDWEST GUARDRAIL SYSTEM (WOOD POST)	ALTERNATIVE IN-LINE TERMINAL SYSTEM	END ANCHOR ASSEMBLY (TYPE SFT)
				(LF)	(EA)	(EA)
L-1	"RL3"	LT	562+60.00 – 565+34.85	284	1	1

(N) NOT A SEPARATE PAY ITEM, FOR INFORMATION ONLY

CONCRETE

SHEET NUMBER	LINE	RT/LT	STATION	SLOPE PAVING (CONCRETE)	
				SQFT (N)	CY
L-1	"RL3"	RT	568+28.24 – 568+88.00	1,412	20

RUBBERIZED HOT MIX ASPHALT (GAP GRADED)

SHEET NUMBER	LINE	STATION	SQFT (N)	TON
L-1/L-2	"RL3"	561+33.39 – 578+53.66	49,082	736

SUMMARY OF QUANTITIES

NO SCALE

Q-1

REVISED BY	DATE REVISED
VERONICA GARCIA-MCGREW	AARON S. BRUSATORI
CALCULATED-DESIGNED BY	CHECKED BY
CONSULTANT FUNCTIONAL SUPERVISOR	AARON BRUSATORI, PE

STATE OF CALIFORNIA – DEPARTMENT OF TRANSPORTATION

Caltrans

LAST REVISION — DATE PLOTTED => 10/14/2020 TIME PLOTTED => 12:34 PM

Dist	COUNTY	ROUTE	POST MILES TOTAL PROJECT	SHEET No.	TOTAL SHEETS
03	ED	50	16.0/16.6	34	45

REGISTERED CIVIL ENGINEER — DATE 7-30-20

AUGUST 31, 2020
PLANS APPROVAL DATE

REGISTERED PROFESSIONAL ENGINEER — KIN Y. CHAN — No. 55391 — Exp. 12-31-20 — CIVIL — STATE OF CALIFORNIA

THE STATE OF CALIFORNIA OR ITS OFFICERS OR AGENTS SHALL NOT BE RESPONSIBLE FOR THE ACCURACY OR COMPLETENESS OF SCANNED COPIES OF THIS PLAN SHEET.

Y&C TRANSPORTATION CONSULTANTS, INC.
3250 RAMOS CIRCLE
SACRAMENTO, CA 95827

CITY OF PLACERVILLE
PUBLIC WORKS
3101 CENTER STREET
PLACERVILLE, CA 95667

INDEX OF ELECTRICAL SYSTEMS PLANS:

SHEET	DESCRIPTION
E-1	INDEX OF ELECTRICAL SYSTEMS PLANS, NOTES, LEGEND, ABBREVIATIONS
E-2	RAMP METERING SYSTEM
E-3 TO E-4	MODIFYING LIGHTING SYSTEMS
E-5 TO E-6	MODIFYING SIGNAL AND LIGHTING SYSTEMS
ED-1 TO ED-5	ELECTRICAL SYSTEMS DETAILS
EQ-1	ELECTRICAL SYSTEMS QUANTITIES

NOTES:

1. PRIOR TO ANY WORK ON PG&E SERVICE POINT, THE CONTRACTOR MUST NOTIFY THE ENGINEER.
2. SEE SHEET ED-3 FOR TRAFFIC RATED PULL BOX DETAILS.

ABBREVIATIONS:

AT&T	AMERICAN TELEPHONE AND TELEGRAPH
EVUDa	EMERGENCY VEHICLE UNIT DETECTOR (CHANNEL a)
PG&E	PACIFIC GAS & ELECTRIC
TC	TELEPHONE CABLE

SYMBOLS:

EXISTING	NEW	DESCRIPTION
——— dbc ———		DIRECT BURIED CABLE
	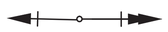	TYPE 1-D Std WITH RAMP METER SIGNALS

INDEX OF ELECTRICAL SYSTEMS PLANS, NOTES, LEGEND, ABBREVIATIONS

ELECTRICAL SYSTEMS

E-1

STATE OF CALIFORNIA — DEPARTMENT OF TRANSPORTATION
Caltrans

CONSULTANT FUNCTIONAL SUPERVISOR: DANIEL K. YAU
CALCULATED-DESIGNED BY: MENG YANG
CHECKED BY: KIN Y. CHAN
REVISED BY
DATE REVISED

LAST REVISION 07-30-20
DATE PLOTTED => $DATE
TIME PLOTTED => $TIME

Dist	COUNTY	ROUTE	POST MILES TOTAL PROJECT	SHEET No.	TOTAL SHEETS
03	ED	50	16.0/16.6	35	45

REGISTERED CIVIL ENGINEER — DATE 7-30-20

AUGUST 31, 2020
PLANS APPROVAL DATE

REGISTERED PROFESSIONAL ENGINEER — KIN Y. CHAN — No. 55391 — Exp. 12-31-20 — CIVIL — STATE OF CALIFORNIA

THE STATE OF CALIFORNIA OR ITS OFFICERS OR AGENTS SHALL NOT BE RESPONSIBLE FOR THE ACCURACY OR COMPLETENESS OF SCANNED COPIES OF THIS PLAN SHEET.

Y&C TRANSPORTATION CONSULTANTS, INC.
3250 RAMOS CIRCLE
SACRAMENTO, CA 95827

CITY OF PLACERVILLE
PUBLIC WORKS
3101 CENTER STREET
PLACERVILLE, CA 95667

NOTE:

FOR ACCURATE RIGHT OF WAY DATA, CONTACT RIGHT OF WAY ENGINEERING AT THE DISTRICT OFFICE.

LEGEND:

1. INSTALL DEPARTMENT–FURNISHED MODEL 2070E CONTROLLER ASSEMBLY WITH MODEL 334 CABINET. FRONT DOOR MUST FACE EAST.
2. INSTALL EQUIPMENT OUTSIDE OF CLEAR RECOVERY ZONE.
3. INSTALL TYPE 1–D POLE WITH FB (YELLOW). SEE DETAIL A ON SHEET ED–2 FOR DETAILS.
4. INSTALL 4G (LTE) WIRELESS MODEM ASSEMBLY, ANTENNA, POWER SUPPLY, ETHERNET SWITCH AND TERMINAL BLOCK IN CABINET. SEE SHEETS ED–4 AND ED–5 FOR DETAILS.
5. INSTALL TYPE 1–B POLE WITH RM SIGNALS. SEE DETAIL SIG ON SHEET ED–2 FOR DETAILS.
6. SEE SHEET ED–1 FOR DETECTOR SPACING AND DESIGNATION DETAILS.
7. 3"C, 2#6 (120 V RM), 2#8 (120 V FB), 9#14, 1#8 (N). 3"C, 12 DLC.
8. 2"C, 9#14, 1#8 (N), 2#8 (240 V Ltg). 2"C, 10 DLC.
9. 2"C, 9#14, 1#8 (N). 2"C, 8 DLC.
10. 2"C, 8 DLC.
11. 2"C, 6 DLC.
12. 2"C, 4 DLC.
13. 2"C, 2 DLC.
14. 2"C, 2#6 (120 V RM), 2#8 (120 V FB), 2#6 (240V Ltg). 2"C, 1 DLC.
15. 2"C, 2#6 (120 V RM), 2#6 (240 V Ltg). 2"C, 1 DLC.
16. 2"C, 2#6 (120 V RM), 2#6 (240 V Ltg).
17. 2"C, 2#8 (120 V FB). 2"C, 1 DLC.
18. 2"C, 2#8 (120 V FB).
19. 2"C, 2#6 (120 V RM), 9#14, 1#8 (N). 2"C, 11 DLC.

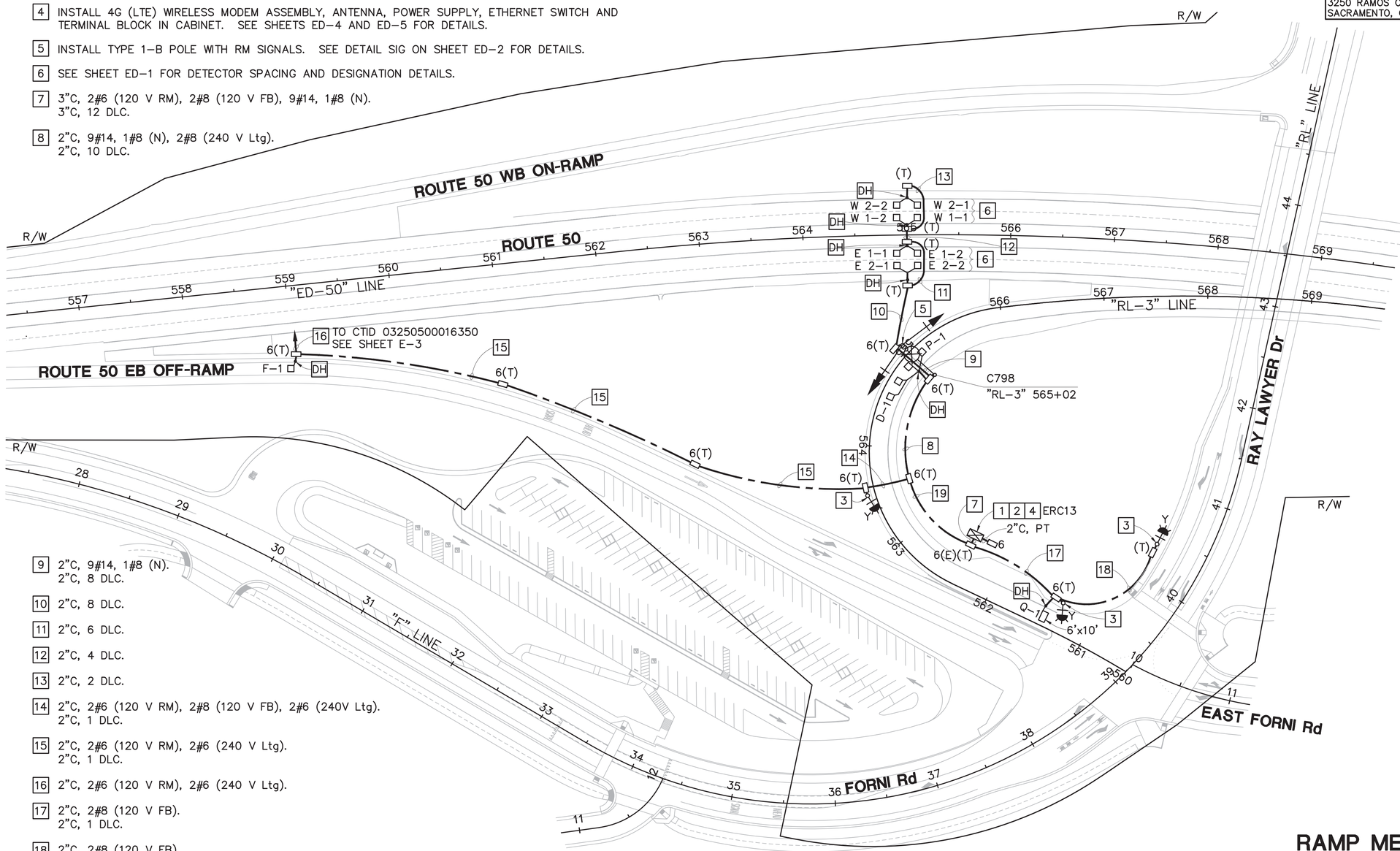

APPROVED FOR ELECTRICAL WORK ONLY

RAMP METERING SYSTEM

SCALE: 1" = 50'

E-2

STATE OF CALIFORNIA – DEPARTMENT OF TRANSPORTATION
Caltrans

CONSULTANT FUNCTIONAL SUPERVISOR: DANIEL K. YAU
CALCULATED–DESIGNED BY: MENG YANG
CHECKED BY: KIN Y. CHAN
REVISED BY
DATE REVISED

LAST REVISION 07–30–20
DATE PLOTTED => $DATE
TIME PLOTTED => $TIME

BORDER LAST REVISED 7/2/2010
USERNAME =>$USER
DGN FILE => $REQUEST
RELATIVE BORDER SCALE IS IN INCHES 0 1 2 3
UNIT XXXX
PROJECT NUMBER & PHASE 03190001521

Dist	COUNTY	ROUTE	POST MILES TOTAL PROJECT	SHEET No.	TOTAL SHEETS
03	ED	50	16.0/16.6	36	45

REGISTERED CIVIL ENGINEER — DATE 7-30-20

AUGUST 31, 2020
PLANS APPROVAL DATE

REGISTERED PROFESSIONAL ENGINEER — KIN Y. CHAN — No. 55391 — Exp. 12-31-20 — CIVIL — STATE OF CALIFORNIA

THE STATE OF CALIFORNIA OR ITS OFFICERS OR AGENTS SHALL NOT BE RESPONSIBLE FOR THE ACCURACY OR COMPLETENESS OF SCANNED COPIES OF THIS PLAN SHEET.

Y&C TRANSPORTATION CONSULTANTS, INC.
3250 RAMOS CIRCLE
SACRAMENTO, CA 95827

CITY OF PLACERVILLE
PUBLIC WORKS
3101 CENTER STREET
PLACERVILLE, CA 95667

NOTE:

FOR ACCURATE RIGHT OF WAY DATA, CONTACT RIGHT OF WAY ENGINEERING AT THE DISTRICT OFFICE.

LEGEND:

1. Exist DBC, 2#6 (240 V Ltg).
2. Exist DBC, 2#6 (240 V Ltg AND SIGN Ltg).
3. Exist DBC, 2#8 (240 V Ltg AND SIGN Ltg).
4. Exist 3"C, 2#6 (240 V Ltg AND SIGN Ltg).
5. Exist 2"C, 2#6 (240 V Ltg).
6. Exist 1½"C, 2#10 (120 V FB), 2#8 (SPARE). ADD 2#6 (240 V Ltg).
7. 2"C, 2#6 (120 V RM), 2#6 (240 V Ltg).
8. Exist 3"C, 2#6 (240 V Ltg AND SIGN Ltg), 2#10 (120 V FB). ADD 2#6 (240 V Ltg), 2#6 (120 V RM).
9. Exist 3"C, 2#6 (240 V Ltg), 2#6 (240 V Ltg AND SIGN Ltg), 2#10 (120 V FB). ADD 2#6 (120 V RM).
10. Exist 3"C, 2#6 (240 V Ltg), 2#6 (240 V Ltg AND SIGN Ltg), 2#10 (120 V FB), 3#14 (PEU). ADD 2#6 (120 V RM).
11. Exist 2"C, 3#2 (SERVICE).
12. Exist 3"C, SERVICE CONDUCTORS TO REMAIN.
13. ADD ONE 30 A, 1P, 120 V CB FOR NEW RM TO Exist SERVICE EQUIPMENT ENCLOSURE. ADD NAMEPLATE "RM".

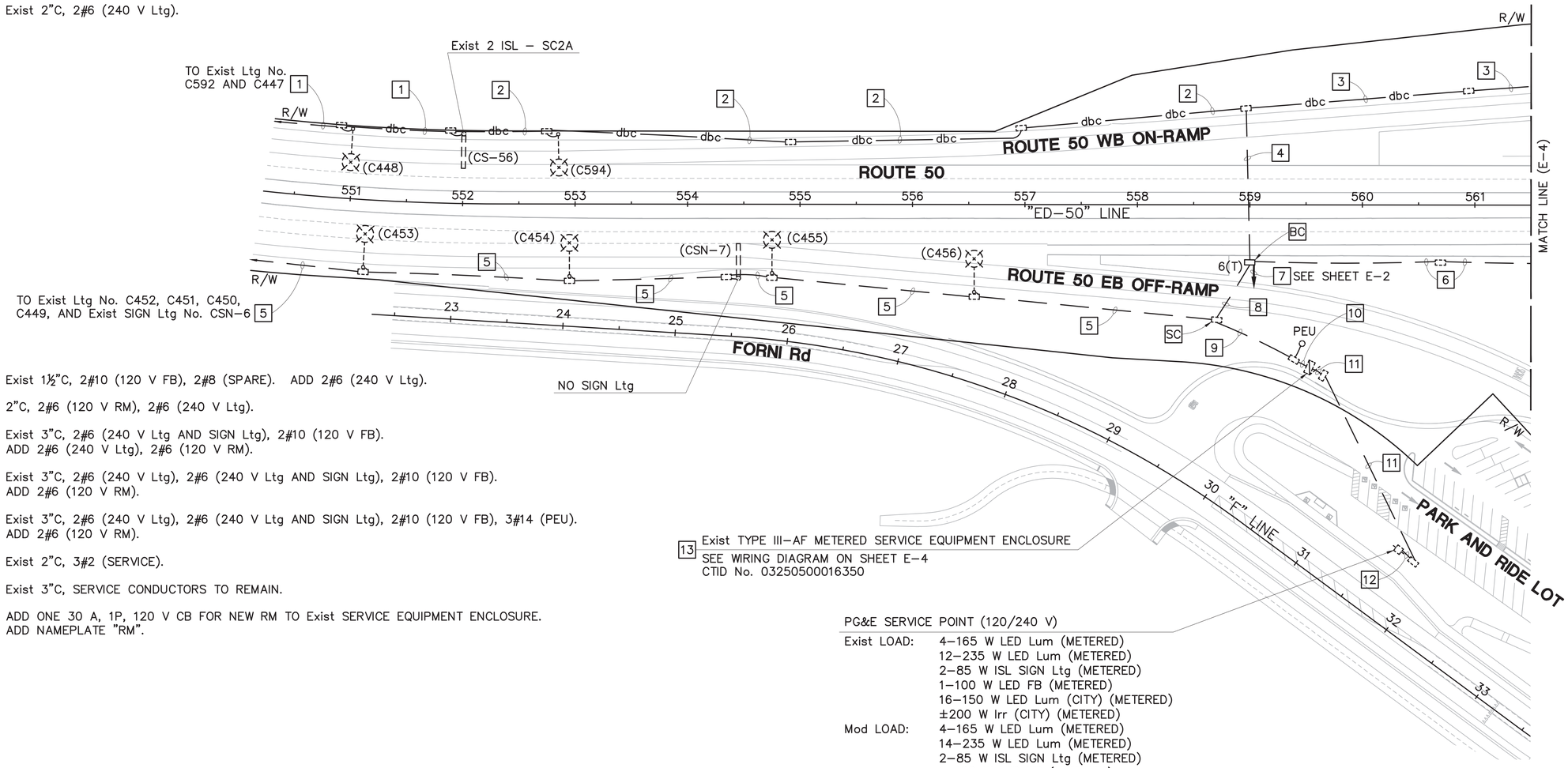

13 Exist TYPE III-AF METERED SERVICE EQUIPMENT ENCLOSURE
SEE WIRING DIAGRAM ON SHEET E-4
CTID No. 03250500016350

PG&E SERVICE POINT (120/240 V)

Exist LOAD:
- 4-165 W LED Lum (METERED)
- 12-235 W LED Lum (METERED)
- 2-85 W ISL SIGN Ltg (METERED)
- 1-100 W LED FB (METERED)
- 16-150 W LED Lum (CITY) (METERED)
- ±200 W Irr (CITY) (METERED)

Mod LOAD:
- 4-165 W LED Lum (METERED)
- 14-235 W LED Lum (METERED)
- 2-85 W ISL SIGN Ltg (METERED)
- 1-100 W LED FB (METERED)
- 16-150 W LED Lum (CITY) (METERED)
- ±200 W Irr (CITY) (METERED)
- 1-500 W RM (METERED)

MODIFYING LIGHTING SYSTEMS

SCALE: 1" = 50'

APPROVED FOR ELECTRICAL WORK ONLY

E-3

STATE OF CALIFORNIA – DEPARTMENT OF TRANSPORTATION
Caltrans
CONSULTANT FUNCTIONAL SUPERVISOR: DANIEL K. YAU
CALCULATED-DESIGNED BY: MENG YANG
CHECKED BY: KIN Y. CHAN
REVISED BY
DATE REVISED

LAST REVISION 07-30-20
DATE PLOTTED => $DATE
TIME PLOTTED => $TIME

Dist	COUNTY	ROUTE	POST MILES TOTAL PROJECT	SHEET No.	TOTAL SHEETS
03	ED	50	16.0/16.6	37	45

REGISTERED CIVIL ENGINEER — DATE 7-30-20

AUGUST 31, 2020
PLANS APPROVAL DATE

REGISTERED PROFESSIONAL ENGINEER — KIN Y. CHAN — No. 55391 — Exp. 12-31-20 — CIVIL — STATE OF CALIFORNIA

THE STATE OF CALIFORNIA OR ITS OFFICERS OR AGENTS SHALL NOT BE RESPONSIBLE FOR THE ACCURACY OR COMPLETENESS OF SCANNED COPIES OF THIS PLAN SHEET.

Y&C TRANSPORTATION CONSULTANTS, INC.
3250 RAMOS CIRCLE
SACRAMENTO, CA 95827

CITY OF PLACERVILLE
PUBLIC WORKS
3101 CENTER STREET
PLACERVILLE, CA 95667

NOTE:
FOR ACCURATE RIGHT OF WAY DATA, CONTACT RIGHT OF WAY ENGINEERING AT THE DISTRICT OFFICE.

LEGEND:
1. Exist 1½"C, 2#10 (120 V FB), 2#8 (SPARE). ADD 2#6 (240 V Ltg).
2. 2"C, 2#6 (240 V Ltg).
3. Exist DBC, 2#8 (240 V Ltg AND SIGN Ltg).
4. Exist 1"C TYPE 1, 2#8 (240 V SIGN Ltg).

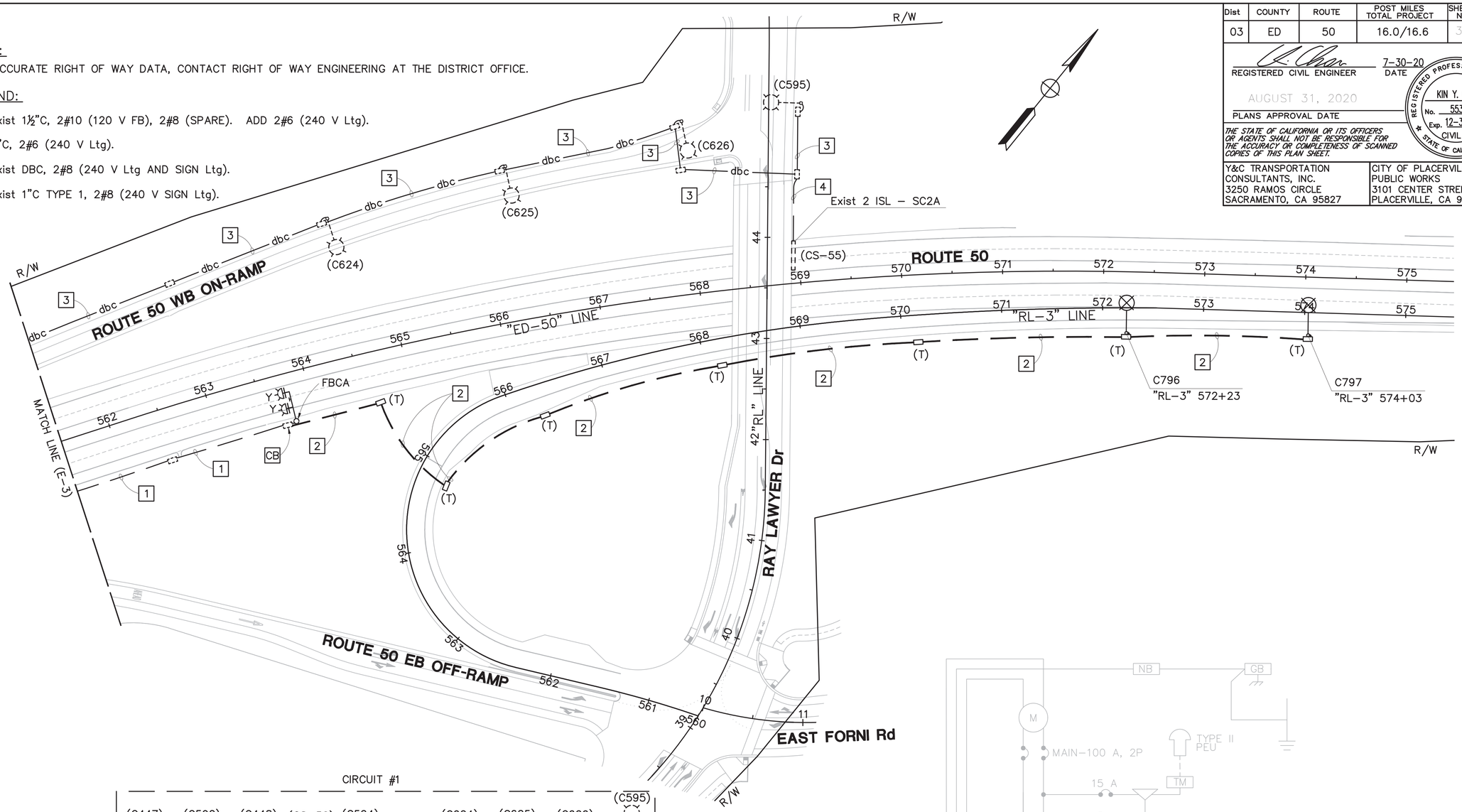

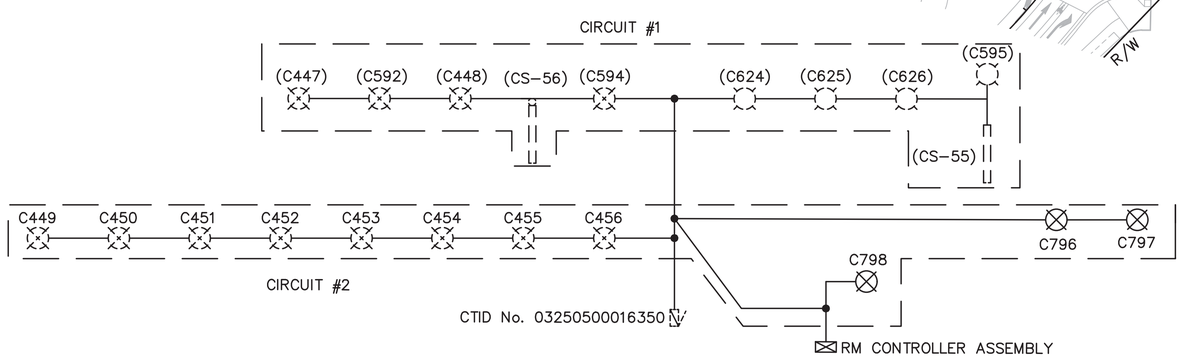

CIRCUIT DIAGRAM
NO SCALE

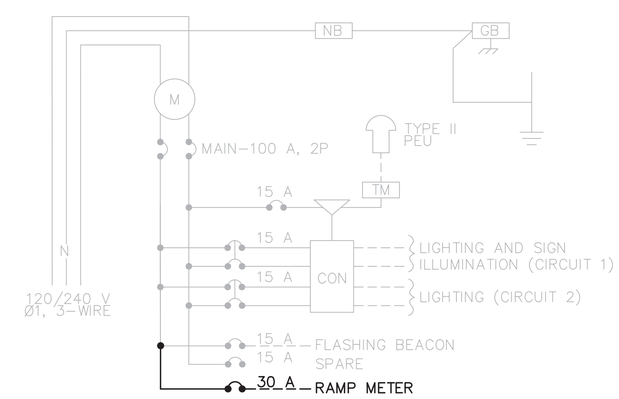

MODIFIED SERVICE WIRING DIAGRAM
CTID No. 03250500016350
NO SCALE

APPROVED FOR ELECTRICAL WORK ONLY

MODIFYING LIGHTING SYSTEMS
SCALE: 1" = 50'

E-4

STATE OF CALIFORNIA – DEPARTMENT OF TRANSPORTATION — Caltrans
CONSULTANT FUNCTIONAL SUPERVISOR: DANIEL K. YAU
CALCULATED-DESIGNED BY: MENG YANG
CHECKED BY: KIN Y. CHAN
REVISED BY
DATE REVISED
LAST REVISION 07-30-20
DATE PLOTTED => $DATE
TIME PLOTTED => $TIME

Dist	COUNTY	ROUTE	POST MILES TOTAL PROJECT	SHEET No.	TOTAL SHEETS
03	ED	50	16.0/16.6	38	45

REGISTERED CIVIL ENGINEER — DATE 7-30-20

AUGUST 31, 2020
PLANS APPROVAL DATE

REGISTERED PROFESSIONAL ENGINEER — KIN Y. CHAN — No. 55391 — Exp. 12-31-20 — CIVIL — STATE OF CALIFORNIA

THE STATE OF CALIFORNIA OR ITS OFFICERS OR AGENTS SHALL NOT BE RESPONSIBLE FOR THE ACCURACY OR COMPLETENESS OF SCANNED COPIES OF THIS PLAN SHEET.

Y&C TRANSPORTATION CONSULTANTS, INC.
3250 RAMOS CIRCLE
SACRAMENTO, CA 95827

CITY OF PLACERVILLE
PUBLIC WORKS
3101 CENTER STREET
PLACERVILLE, CA 95667

NOTES:

1. FOR ACCURATE RIGHT OF WAY DATA, CONTACT RIGHT OF WAY ENGINEERING AT THE DISTRICT OFFICE.
2. SEE SHEET E-6 FOR SCHEDULES.

LEGEND:

1. INSTALL VEHICLE SIGNAL HEAD ON Exist TENON.
2. INSTALL VEHICLE SIGNAL HEAD ON Exist SIGNAL STANDARD.
3. RC EXISTING SIGN. IS R61-5.1 (CA).
4. Exist MODEL 2070 CONTROLLER ASSEMBLY WITH MODEL 342LX CABINET WITH BBS COMPONENT. RECONFIGURE CONTROLLER FOR PROPOSED TRAFFIC PHASE DIAGRAM.
5. CONNECT AND ACTIVATE Exist DLC WITH LOOP WIRES FOR 6J4L.
6. CONNECT AND ACTIVATE Exist DLC WITH LOOP WIRES FOR 5J1U.
7. Exist TYPE B TDC. COORDINATE WITH AT&T FOR SERVICE CONNECTION FOR NEW RM.
8. Exist 2"C, 1 TC.
9. INSTALL 4G (LTE) WIRELESS MODEM ASSEMBLY, ANTENNA, POWER SUPPLY, ETHERNET SWITCH AND TERMINAL BLOCK IN CABINET. SEE SHEETS ED-4 AND ED-5 FOR DETAILS.
10. Exist 2"C, 2#10 (120 V TDC).
11. Exist 2"C, TELEPHONE SERVICE CONDUCTORS TO REMAIN.
12. Exist 2"C, 1 DLC.
13. Exist 2"C, 3 DLC.
14. Exist 2"C, 4 DLC.
15. Exist 2"C, 5 DLC.
16. Exist 2"C, 2#6 (120 V Sig), 2#8 (240 V Ltg), 2#10 (120 V TDC), 3#14 (PEU).
17. Exist 2"C, 3#2 (SERVICE).
18. RC Exist SIGN. IS R73-3 (CA).

TSP AT&T UNDERGROUND SERVICE (TC No. 600)

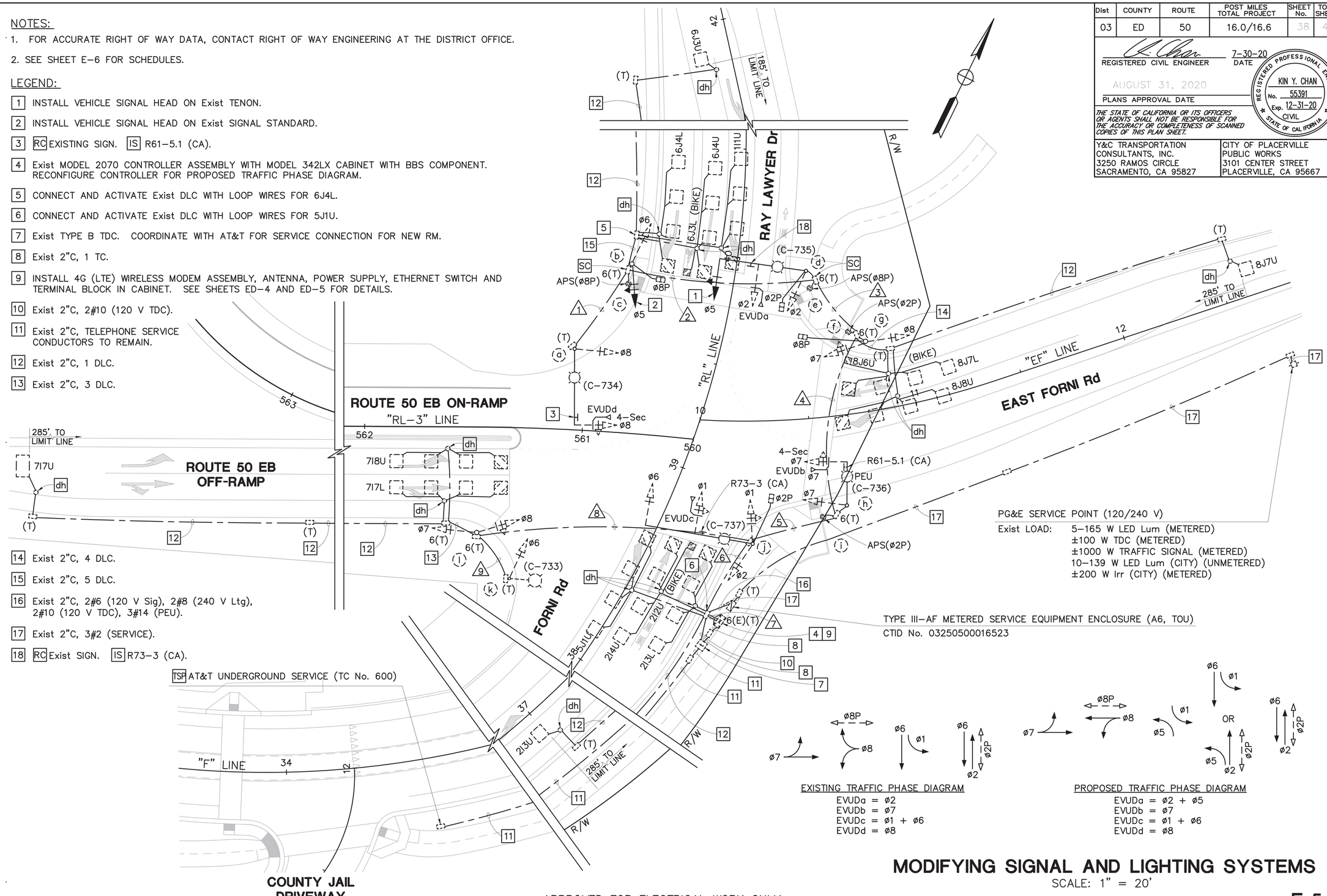

PG&E SERVICE POINT (120/240 V)

Exist LOAD: 5-165 W LED Lum (METERED)
±100 W TDC (METERED)
±1000 W TRAFFIC SIGNAL (METERED)
10-139 W LED Lum (CITY) (UNMETERED)
±200 W Irr (CITY) (METERED)

TYPE III-AF METERED SERVICE EQUIPMENT ENCLOSURE (A6, TOU)
CTID No. 03250500016523

EXISTING TRAFFIC PHASE DIAGRAM
EVUDa = ø2
EVUDb = ø7
EVUDc = ø1 + ø6
EVUDd = ø8

PROPOSED TRAFFIC PHASE DIAGRAM
EVUDa = ø2 + ø5
EVUDb = ø7
EVUDc = ø1 + ø6
EVUDd = ø8

MODIFYING SIGNAL AND LIGHTING SYSTEMS

SCALE: 1" = 20'

APPROVED FOR ELECTRICAL WORK ONLY

E-5

STATE OF CALIFORNIA – DEPARTMENT OF TRANSPORTATION — Caltrans

CONSULTANT FUNCTIONAL SUPERVISOR: DANIEL K. YAU
CALCULATED-DESIGNED BY: MENG YANG
CHECKED BY: KIN Y. CHAN
REVISED BY
DATE REVISED

LAST REVISION 07-30-20
DATE PLOTTED => $DATE
TIME PLOTTED => $TIME

Dist	COUNTY	ROUTE	POST MILES TOTAL PROJECT	SHEET No.	TOTAL SHEETS
03	ED	50	16.0/16.6	39	45

REGISTERED CIVIL ENGINEER — DATE 7-30-20

AUGUST 31, 2020
PLANS APPROVAL DATE

REGISTERED PROFESSIONAL ENGINEER — KIN Y. CHAN — No. 55391 — Exp. 12-31-20 — CIVIL — STATE OF CALIFORNIA

THE STATE OF CALIFORNIA OR ITS OFFICERS OR AGENTS SHALL NOT BE RESPONSIBLE FOR THE ACCURACY OR COMPLETENESS OF SCANNED COPIES OF THIS PLAN SHEET.

Y&C TRANSPORTATION CONSULTANTS, INC.
3250 RAMOS CIRCLE
SACRAMENTO, CA 95827

CITY OF PLACERVILLE
PUBLIC WORKS
3101 CENTER STREET
PLACERVILLE, CA 95667

NOTE:
FOR ACCURATE RIGHT OF WAY DATA, CONTACT RIGHT OF WAY ENGINEERING AT THE DISTRICT OFFICE.

Exist CONDUCTOR AND CONDUIT SCHEDULE

CONDUCTOR DESIGNATION			RUN NUMBER								
			NUMBER OF CONDUCTORS								
CABLE TYPE	Std (X)	PHASE	1	2	3	4	5	6	7	8	9
Veh–Ped 12CSC	(a)	8	1	1	1	1	1	1	1		
	(b)	5,6,8P		1	1	1	1	1	1		
	(c)	8			1	1	1	1	1	1	
	(d)	2,5,2P			1	1	1	1	1		
	(e)	8				1	1	1	1	1	
	(f)	2					1	1	1	1	
	(g)	7,8,8P				1	1	1	1		
	(h)	7					1	1	1		
	(j)	2						1	1	1	
	(j)	1,2,6,2P						2	2		
APS 3CSC	(k)	6						1	1	1	1
	(l)	7,8						1	1	1	
TOTAL CABLES 12/3 CONDUCTORS			1	2 / 1	3 / 2	4 / 3	5 / 4	9 / 4	9 / 4	2	1
AWG			CIRCUIT								
#8	LIGHTING (240 V)		2	2	2	2	2	2		2	2
#6	SIGNAL (120 V)								2		
EVUC			1	1	2	2	3	4	4		
APS MANUFACTURER'S CABLE					2		1				
	PHASE										
TYPE B DLC	ø1			1	1	1	1	1	1		
	ø2								3		
	ø2 ADV/INT								1		
	ø5								1		
	ø6			3	3	3	3	3	3		
	ø6 ADV/INT			1	1	1	1	1	1		
	ø7							2	2	2	
	ø7 ADV/INT							1	1	1	
	ø8					3	3	3	3		
	ø8 ADV/INT					1	1	1	1		
TOTAL DLCs PER RUN				5	5	9	9	12	17	3	
CONDUIT SIZE			3"	4"	4"	2–4"	2–4"	2–4"	3–4"	4"	3"
% FILL			9	13	20	13	18	25	17	11	8

MODIFIED STANDARD AND EQUIPMENT SCHEDULE

STANDARD				Veh Sig Mtg				Ped Sig		APS		LED Lum	SPECIAL REQUIREMENTS
(X)	TYPE	SMA	LMA	ø	MAST ARM	ø	POLE	ø	Mtg	ø	ARROW		
(a)	Exist 24–4–100	35'	15'	8	MAS–4B	8	SV–1–T					Rdwy 1	SEE NOTE [3] ON SHEET E–5.
(b)	Exist 1–B					5+ / 6	TV–2–T +	8	SP–1–T				SEE NOTE [2] ON SHEET E–5.
(c)	Exist PBA POST									8	→		ALL EXISTING EQUIPMENT TO REMAIN.
(d)	Exist 26–4–100	40'	15'	5+ / 2	MAS+ / MAS	2	SV–1–T	2	SP–1–T			Rdwy 1	SEE NOTES [1] AND [18] ON SHEET E–5.
(e)	Exist PBA POST									8	←		ALL EXISTING EQUIPMENT TO REMAIN.
(f)	Exist PBA POST									2	→		ALL EXISTING EQUIPMENT TO REMAIN.
(g)	Exist 1–B					7 / 8	TV–2–T	8	SP–1–T				ALL EXISTING EQUIPMENT TO REMAIN.
(h)	Exist 17–3–70	20'	15'	7	MAS–4B	7	SV–1–T					Rdwy 1	ALL EXISTING EQUIPMENT TO REMAIN.
(j)	Exist PBA POST									2	←		ALL EXISTING EQUIPMENT TO REMAIN.
(j)	Exist 29–5–100	50'	15'	1 / 6	MAS / MAS	1 / 2	SV–2–TB	2	SP–1–T			Rdwy 1	ALL EXISTING EQUIPMENT TO REMAIN.
(k)	Exist 15TS		15'			6	SV–1–T					Rdwy 1	ALL EXISTING EQUIPMENT TO REMAIN.
(l)	Exist 1–B					1 / 2	SV–2–TB						ALL EXISTING EQUIPMENT TO REMAIN.

+ = INSTALL NEW EQUIPMENT ON EXISTING MAST ARM OR POLE.

APPROVED FOR ELECTRICAL WORK ONLY

MODIFYING SIGNAL AND LIGHTING SYSTEMS
NO SCALE

E-6

STATE OF CALIFORNIA – DEPARTMENT OF TRANSPORTATION
CONSULTANT FUNCTIONAL SUPERVISOR: DANIEL K. YAU
CALCULATED-DESIGNED BY: MENG YANG — CHECKED BY: KIN Y. CHAN
REVISED BY — DATE REVISED

LAST REVISION 07–30–20 — DATE PLOTTED => $DATE — TIME PLOTTED => $TIME

Dist	COUNTY	ROUTE	POST MILES TOTAL PROJECT	SHEET No.	TOTAL SHEETS
03	ED	50	16.0/16.6	40	45

REGISTERED CIVIL ENGINEER — DATE 7-30-20

AUGUST 31, 2020
PLANS APPROVAL DATE

REGISTERED PROFESSIONAL ENGINEER — KIN Y. CHAN — No. 55391 — Exp. 12-31-20 — CIVIL — STATE OF CALIFORNIA

THE STATE OF CALIFORNIA OR ITS OFFICERS OR AGENTS SHALL NOT BE RESPONSIBLE FOR THE ACCURACY OR COMPLETENESS OF SCANNED COPIES OF THIS PLAN SHEET.

Y&C TRANSPORTATION CONSULTANTS, INC.
3250 RAMOS CIRCLE
SACRAMENTO, CA 95827

CITY OF PLACERVILLE
PUBLIC WORKS
3101 CENTER STREET
PLACERVILLE, CA 95667

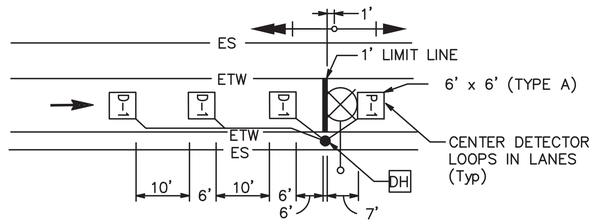

ONE LANE

DETAIL RM
RAMP METERING

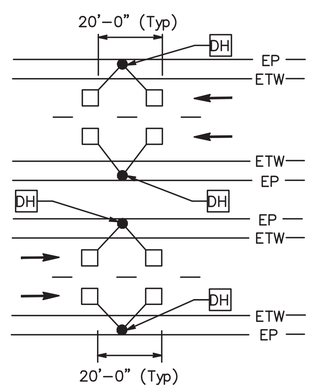

DETAIL TM
TRAFFIC MONITORING STATION

FREEWAY MAINLINE DETECTOR DESIGNATION: N 3-2

N=NORTHBOUND LANES (NB)
S=SOUTHBOUND LANES (SB)
E=EASTBOUND LANES (EB)
W=WESTBOUND LANES (WB)

NUMBER OF LANES FROM LEFT WITH RESPECT TO DIRECTION OF TRAFFIC:
1=FIRST LANE FROM LEFT
2=SECOND LANE FROM LEFT
3=THIRD LANE FROM LEFT
4=FOURTH LANE FROM LEFT

NUMBER OF DETECTOR IN THE SAME LANE:
1=ENTERING DETECTOR
2=LEAVING DETECTOR

TRAFFIC MONITORING STATION NOTES

D-2

D=DEMAND DETECTOR
P=PASSAGE DETECTOR
Q=QUEUE DETECTOR
F=OFF-RAMP DETECTOR

1=FIRST LANE FROM LEFT
2=SECOND LANE FROM LEFT

RAMP DETECTOR DESIGNATION

LOOP DETECTOR DESIGNATION

ELECTRICAL SYSTEMS DETAILS
NO SCALE

ED-1

STATE OF CALIFORNIA – DEPARTMENT OF TRANSPORTATION
Caltrans
CONSULTANT FUNCTIONAL SUPERVISOR: DANIEL K. YAU
CALCULATED-DESIGNED BY: MENG YANG
CHECKED BY: KIN Y. CHAN
REVISED BY
DATE REVISED

LAST REVISION 07-30-20
DATE PLOTTED => $DATE
TIME PLOTTED => $TIME

Dist	COUNTY	ROUTE	POST MILES TOTAL PROJECT	SHEET No.	TOTAL SHEETS
03	ED	50	16.0/16.6	41	45

REGISTERED CIVIL ENGINEER 7-30-20 DATE

AUGUST 31, 2020
PLANS APPROVAL DATE

REGISTERED PROFESSIONAL ENGINEER KIN Y. CHAN No. 55391 Exp. 12-31-20 CIVIL STATE OF CALIFORNIA

THE STATE OF CALIFORNIA OR ITS OFFICERS OR AGENTS SHALL NOT BE RESPONSIBLE FOR THE ACCURACY OR COMPLETENESS OF SCANNED COPIES OF THIS PLAN SHEET.

Y&C TRANSPORTATION CONSULTANTS, INC.
3250 RAMOS CIRCLE
SACRAMENTO, CA 95827

CITY OF PLACERVILLE
PUBLIC WORKS
3101 CENTER STREET
PLACERVILLE, CA 95667

NOTE:

THE CONTRACTOR MUST VERIFY ALL CONTROLLING FIELD DIMENSIONS BEFORE ORDERING OR FABRICATING ANY MATERIAL.

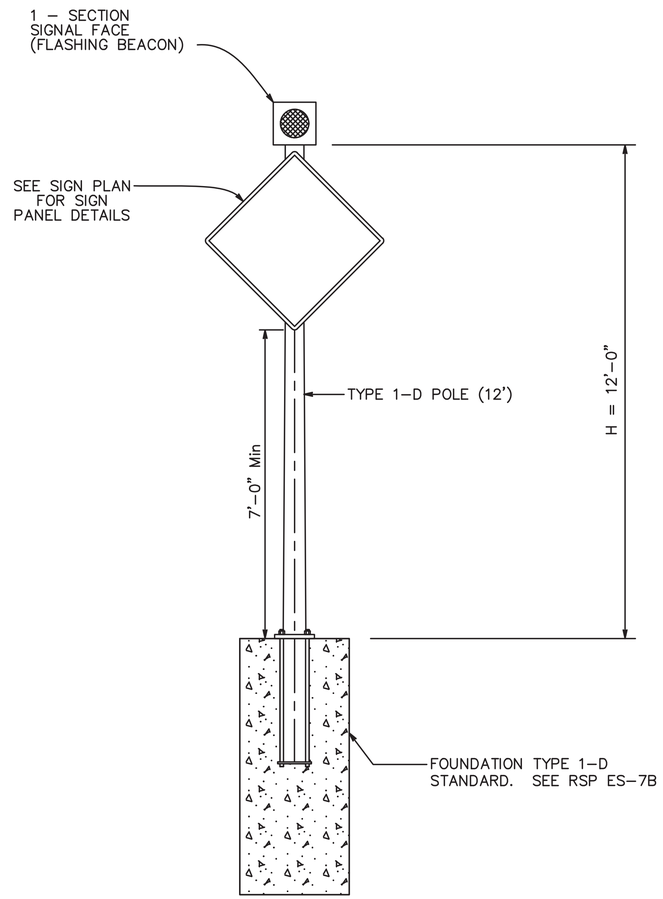

DETAIL A

TYPE 1-D STANDARD

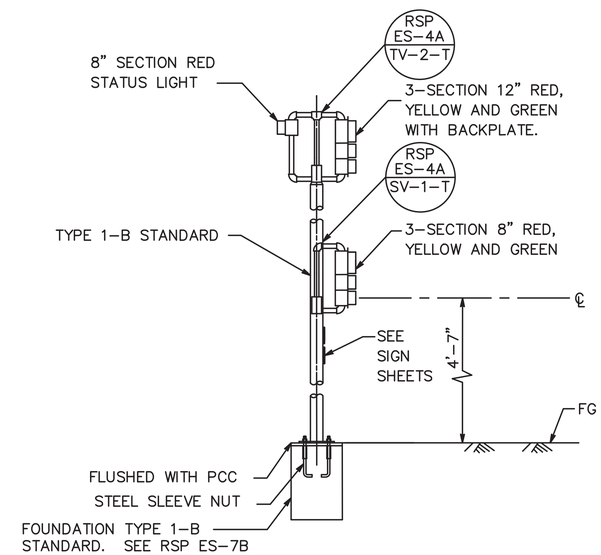

DETAIL SIG

RAMP METER SIGNAL, POLE MOUNTED

NOTE: SEE CALTRANS RSP ES–7B FOR DETAILS.

ELECTRICAL SYSTEMS DETAILS

NO SCALE

ED-2

STATE OF CALIFORNIA – DEPARTMENT OF TRANSPORTATION

Caltrans

CONSULTANT FUNCTIONAL SUPERVISOR: DANIEL K. YAU

CALCULATED-DESIGNED BY: MENG YANG

CHECKED BY: KIN Y. CHAN

REVISED BY

DATE REVISED

LAST REVISION 07-30-20

DATE PLOTTED => $DATE
TIME PLOTTED => $TIME

Dist	COUNTY	ROUTE	POST MILES TOTAL PROJECT	SHEET No.	TOTAL SHEETS
03	ED	50	16.0/16.6	42	45

REGISTERED CIVIL ENGINEER — DATE 7-30-20

AUGUST 31, 2020
PLANS APPROVAL DATE

REGISTERED PROFESSIONAL ENGINEER — KIN Y. CHAN — No. 55391 — Exp. 12-31-20 — CIVIL — STATE OF CALIFORNIA

THE STATE OF CALIFORNIA OR ITS OFFICERS OR AGENTS SHALL NOT BE RESPONSIBLE FOR THE ACCURACY OR COMPLETENESS OF SCANNED COPIES OF THIS PLAN SHEET.

Y&C TRANSPORTATION CONSULTANTS, INC.
3250 RAMOS CIRCLE
SACRAMENTO, CA 95827

CITY OF PLACERVILLE
PUBLIC WORKS
3101 CENTER STREET
PLACERVILLE, CA 95667

NOTES ON PULL BOXES:

1. FOR ADDITIONAL DETAILS, SEE REVISED STANDARD PLAN ES-8B.
2. WELDING SHALL COMPLY WITH REQUIREMENTS IN STANDARD SPECIFICATION SECTION 75.
3. A PULL BOX FOR A POST OR A POLE STANDARD MUST BE LOCATED WITHIN 5 FEET OF THE STANDARD.

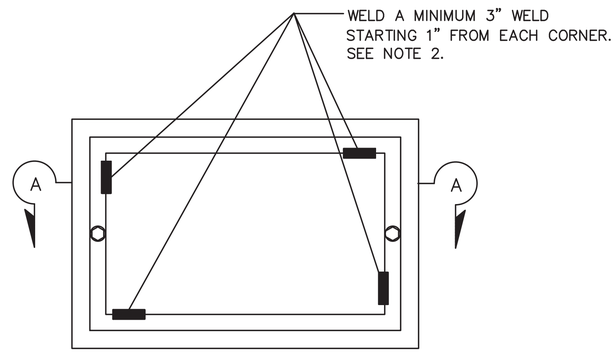

TOP VIEW

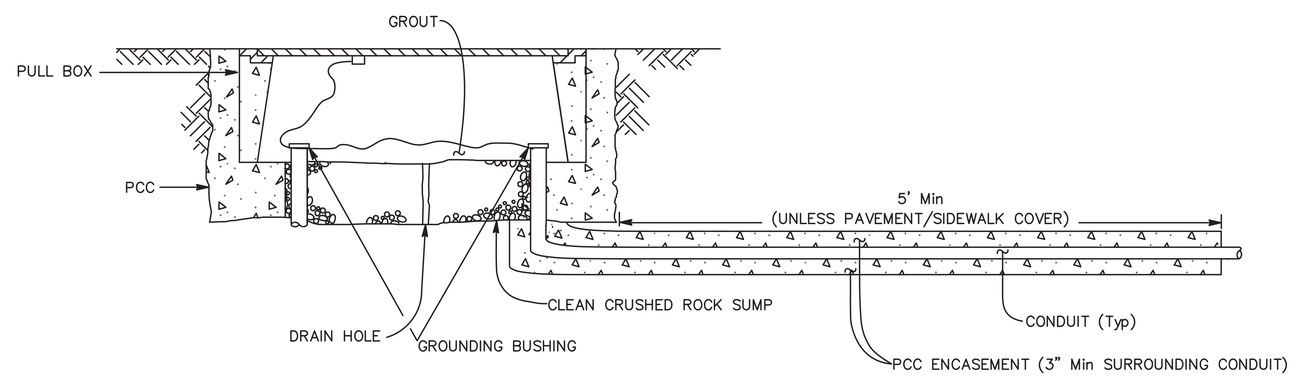

SECTION A-A

TRAFFIC PULL BOX

ELECTRICAL SYSTEMS DETAILS

NO SCALE

ED-3

REVISED BY	DATE REVISED
MENG YANG	KIN Y. CHAN
CALCULATED-DESIGNED BY	CHECKED BY
CONSULTANT FUNCTIONAL SUPERVISOR	DANIEL K. YAU

STATE OF CALIFORNIA — DEPARTMENT OF TRANSPORTATION

Caltrans

LAST REVISION 07-30-20 — DATE PLOTTED => $DATE — TIME PLOTTED => $TIME

Dist	COUNTY	ROUTE	POST MILES TOTAL PROJECT	SHEET No.	TOTAL SHEETS
03	ED	50	16.0/16.6	43	45

REGISTERED CIVIL ENGINEER — DATE 7-30-20

AUGUST 31, 2020
PLANS APPROVAL DATE

REGISTERED PROFESSIONAL ENGINEER — KIN Y. CHAN — No. 55391 — Exp. 12-31-20 — CIVIL — STATE OF CALIFORNIA

THE STATE OF CALIFORNIA OR ITS OFFICERS OR AGENTS SHALL NOT BE RESPONSIBLE FOR THE ACCURACY OR COMPLETENESS OF SCANNED COPIES OF THIS PLAN SHEET.

Y&C TRANSPORTATION CONSULTANTS, INC.
3250 RAMOS CIRCLE
SACRAMENTO, CA 95827

CITY OF PLACERVILLE
PUBLIC WORKS
3101 CENTER STREET
PLACERVILLE, CA 95667

NOTE (THIS SHEET ONLY):

1. PROVIDE 6–5' LONG CAT 6 CABLES, AND 2–3' LONG RJ–11 TELEPHONE.
2. USE 2 PAIR, 22 AWG, STRANDED AND TINNED COPPER WIRES WITH PVC JACKET TYPE INSULATION AS SPECIFIED IN THE SPECIAL PROVISIONS FOR COMPONENT POWER WIRING.
3. TERMINATE TELEPHONE CABLE PER ENGINEER'S INSTRUCTION IN THE FIELD.

LEGEND (THIS SHEET ONLY):

1. INSTALL 4G (LTE) WIRELESS MODEM ASSEMBLY AND ETHERNET EXTENDER SWITCH COMBINATION UNIT ON DIN RAIL AS SHOWN IN DETAILS I AND H.
2. REMOVE BLANK PLATE.
3. INSTALL STANDARD HALF SHELF AS SHOWN.
4. INSTALL 24 VDC POWER SUPPLY ON DIN RAIL.
5. REMOVE EXISTING TERMINAL BLOCK TBO AND INSTALL TWO 8P8C (EIA568B, RJ–45) AND TWO 6P2C (RJ–11) MODULAR CONNECTORS ON DIN RAIL.
6. INSTALL REMOTE ETHERNET POWER CONTROLLER SWITCH.
7. INSTALL MULTIPLE AC OUTLET STRIP.
8. INSTALL DATA SURGE SUPPRESSOR AS SHOWN. THE CONTRACTOR HAS THE OPTION TO INSTALL TWO TWO–LINE SURGE PROTECTORS, ONE FOR RJ–45 AND ONE FOR RJ–11.
9. CONNECT SOLID #10 GROUND WIRE TO EQUIPMENT GROUND.
10. INSTALL ETHERNET EXTENDER–SWITCH COMBINATION UNIT ON DIN RAIL AS SHOWN IN DETAILS I AND H. IF UNITS HAVE SFP PORTS, SFP TRANSCEIVERS RECOMMENDED BY THE MANUFACTURER MUST BE INSTALLED IN ALL SFP PORTS.
11. INSTALL DEPARTMENT–FURNISHED MODEL 2070 CONTROLLER FOR RAMP METERING AND TRAFFIC MONITORING SYSTEMS.
12. INSTALL DC TERMINAL BLOCK ON DIN RAIL.
13. INSTALL 4G (LTE) ANTENNA AND RUN ANTENNA CABLE PER MANUFACTURER RECOMMENDATION AS SHOWN IN DETAIL K SHEET ED–9.

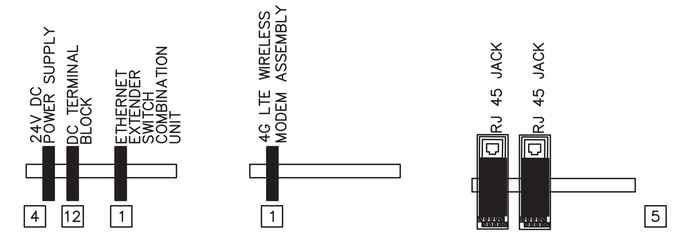

EQUIPMENT INSTALLATION ON DIN RAIL (TYPICAL)

DETAIL I

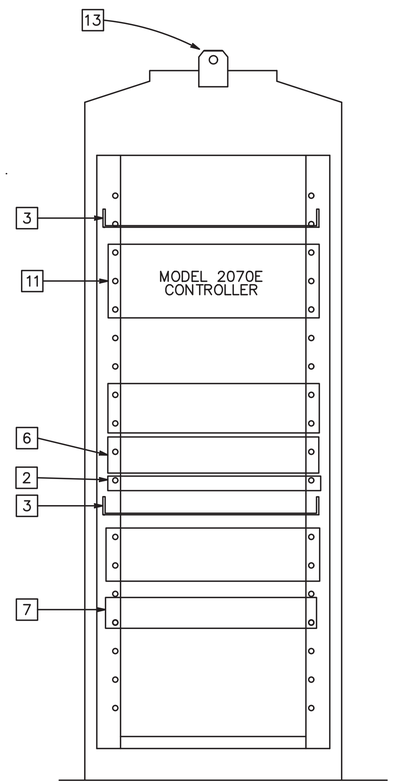

CABINET ASSEMBLY LAYOUT (TYPICAL)

(FRONT VIEW)
334L CONTROLLER CABINET

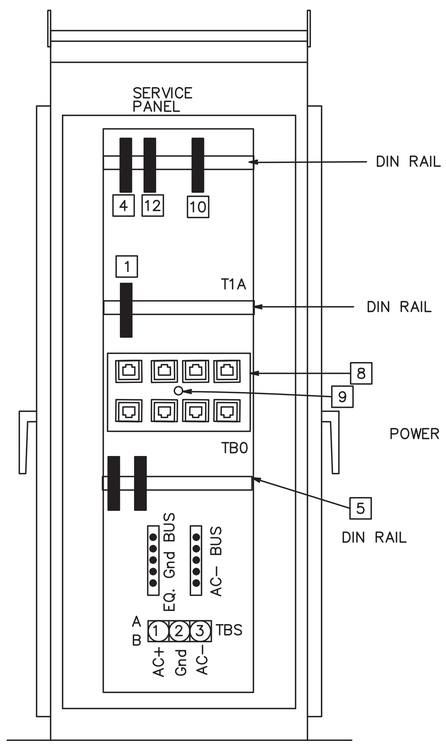

CABINET ASSEMBLY LAYOUT (TYPICAL)

(SIDE VIEW)
334L CONTROLLER CABINET

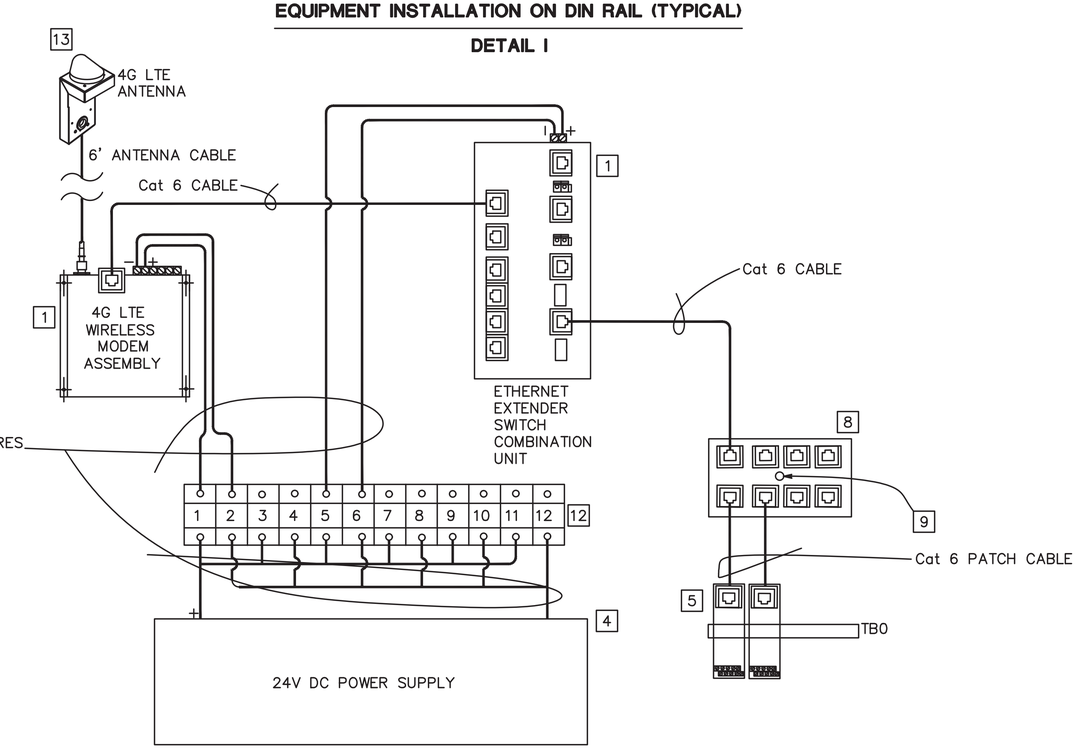

EQUIPMENT INTERCONNECTION (TYPICAL)

DETAIL H

ELECTRICAL SYSTEMS DETAILS

NO SCALE

ED-4

STATE OF CALIFORNIA – DEPARTMENT OF TRANSPORTATION

CONSULTANT FUNCTIONAL SUPERVISOR: DANIEL K. YAU

CALCULATED–DESIGNED BY: MENG YANG — CHECKED BY: KIN Y. CHAN

REVISED BY — DATE REVISED

LAST REVISION 07–30–20 — DATE PLOTTED => $DATE — TIME PLOTTED => $TIME

Dist	COUNTY	ROUTE	POST MILES TOTAL PROJECT	SHEET No.	TOTAL SHEETS
03	ED	50	16.0/16.6	44	45

REGISTERED CIVIL ENGINEER — DATE 7-30-20

AUGUST 31, 2020
PLANS APPROVAL DATE

REGISTERED PROFESSIONAL ENGINEER — KIN Y. CHAN — No. 55391 — Exp. 12-31-20 — CIVIL — STATE OF CALIFORNIA

THE STATE OF CALIFORNIA OR ITS OFFICERS OR AGENTS SHALL NOT BE RESPONSIBLE FOR THE ACCURACY OR COMPLETENESS OF SCANNED COPIES OF THIS PLAN SHEET.

Y&C TRANSPORTATION CONSULTANTS, INC.
3250 RAMOS CIRCLE
SACRAMENTO, CA 95827

CITY OF PLACERVILLE
PUBLIC WORKS
3101 CENTER STREET
PLACERVILLE, CA 95667

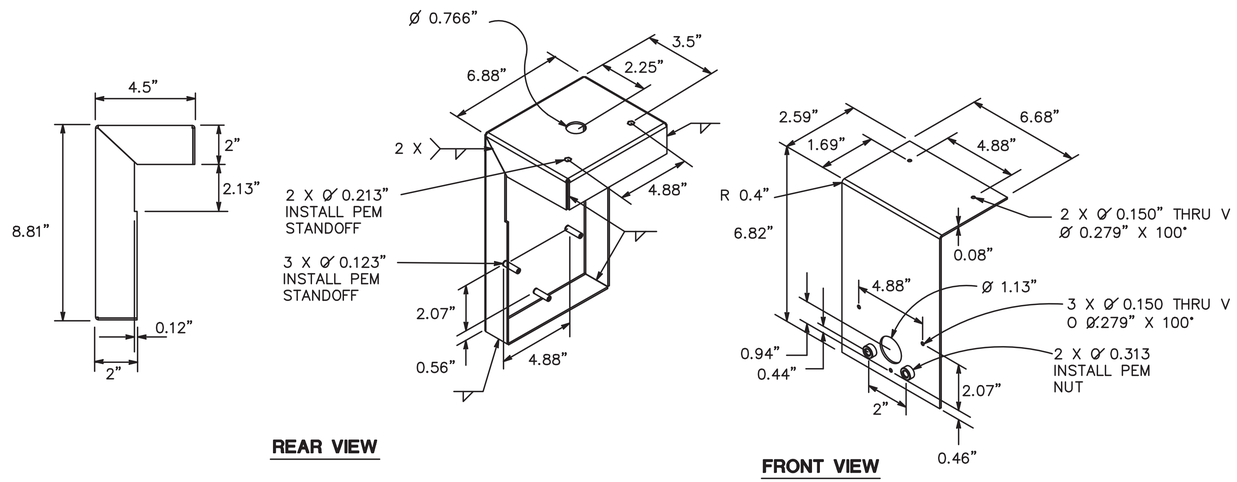

REAR VIEW

FRONT VIEW

BRACKET

* THE CONTRACTOR SHALL SUBMIT A PROTOTYPE OF BRACKET TO THE ENGINEER FOR APPROVAL.

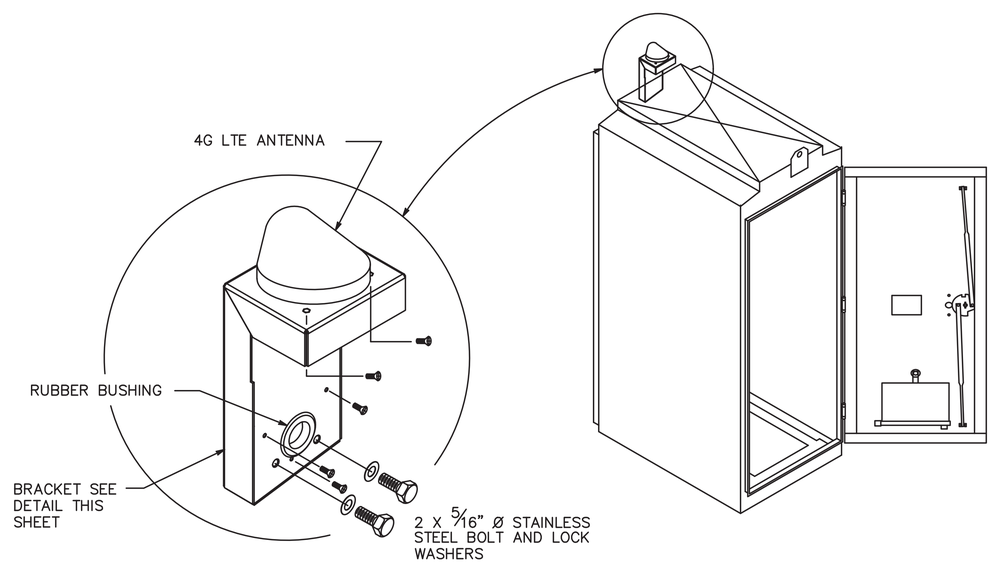

4G LTE WIRELESS ANTENNA INSTALLATION ON CABINET

DETAIL K

ELECTRICAL SYSTEMS DETAILS

NO SCALE

ED-5

REVISED BY	DATE REVISED

CALCULATED-DESIGNED BY	CHECKED BY
MENG YANG	KIN Y. CHAN

CONSULTANT FUNCTIONAL SUPERVISOR: DANIEL K. YAU

STATE OF CALIFORNIA – DEPARTMENT OF TRANSPORTATION — Caltrans

LAST REVISION 07-30-20 — DATE PLOTTED => $DATE — TIME PLOTTED => $TIME

Dist	COUNTY	ROUTE	POST MILES TOTAL PROJECT	SHEET No.	TOTAL SHEETS
03	ED	50	16.0/16.6	45	45

REGISTERED CIVIL ENGINEER — DATE 7-30-20

AUGUST 31, 2020
PLANS APPROVAL DATE

REGISTERED PROFESSIONAL ENGINEER — KIN Y. CHAN — No. 55391 — Exp. 12-31-20 — CIVIL — STATE OF CALIFORNIA

THE STATE OF CALIFORNIA OR ITS OFFICERS OR AGENTS SHALL NOT BE RESPONSIBLE FOR THE ACCURACY OR COMPLETENESS OF SCANNED COPIES OF THIS PLAN SHEET.

Y&C TRANSPORTATION CONSULTANTS, INC.
3250 RAMOS CIRCLE
SACRAMENTO, CA 95827

CITY OF PLACERVILLE
PUBLIC WORKS
3101 CENTER STREET
PLACERVILLE, CA 95667

NOTE:

ELECTRICAL SYSTEMS QUANTITY TABLES SUMMARIZE SIGNIFICANT COMPONENTS.
SEE ELECTRICAL SYSTEMS PLANS AND SPECIFICATIONS TO DETERMINE ALL MATERIALS NEEDED FOR EACH SYSTEM.

RAMP METERING SYSTEM

SHEET No.	(N) No. 5(T) PB	No. 6 PB	No. 6(T) PB	No. 6(E)(T) PB	LOOP DETECTOR, TYPE A (6'x6')	LOOP DETECTOR, TYPE A (6'x10')	TYPE 30 LIGHTING Std	TYPE 30 LIGHTING Std Fdn	235 W LED Lum	TYPE 1-D Std WITH FB	TYPE 1-B Std	TYPE 1-D Fdn	TYPE 1-B Fdn	SIGNAL MOUNT TV-2-T	SIGNAL MOUNT SV-1-T	SIGNAL 3-12" (HOUSING, BACKPLATE, LED)	SIGNAL 1-8" (HOUSING, BACKPLATE, LED)	MODEL 334L CABINET Fdn WITH ANCHOR BOLTS	4G LTE WIRELESS MODEM ASSEMBLY	4G LTE ANTENNA	ETHERNET EXTENDER SWITCH COMBINATION UNIT	REMOTE ETHERNET POWER CONTROLLER SWITCH	24 VDC POWER SUPPLY	DATA SURGE SUPPRESSOR	DC TERMINAL BLOCK	2" CONDUIT (TYPE 3)	3" CONDUIT (TYPE 3)	No. 6 CONDUCTOR	No. 8 CONDUCTOR	No. 8 BARE CONDUCTOR	No. 14 CONDUCTOR	DLC
	EA	EA	EA	EA	EA	EA	EA	EA	EA	EA	EA	EA	EA	EA	EA	EA	EA	EA	EA	EA	EA	EA	EA	EA	EA	LF	LF	LF	LF	LF	LF	LF
E-2	5	1	8	1	13	1	1	1	1	3	1	3	1	1	1	2	1	1	1	1	1	1	1	1	1	2215	10	2810	540	2225	2025	3985

(N) – NOT A SEPARATE BID ITEM

MODIFYING LIGHTING SYSTEMS

SHEET No.	(N) No. 5(T) PB	235 W Rdwy 2 LED Lum	TYPE 30 LIGHTING Std	TYPE 30 LIGHTING Std Fdn	30 A, 1P, 120 V, CB	2" CONDUIT (TYPE 3)	No. 6 CONDUCTOR	No. 8 BARE CONDUCTOR
	EA	EA	EA	EA	EA	LF	LF	LF
E-3					1		1640	2930
E-4	7	2	2	2		1030	2500	1030

(N) – NOT A SEPARATE BID ITEM

MODIFYING SIGNAL AND LIGHTING SYSTEMS

SHEET No.	(N) SIGNAL MOUNT MAS	SIGNAL MOUNT TV-2-T	SIGNAL 3-12" (HOUSING, BACKPLATE, LED)	4G LTE WIRELESS MODEM ASSEMBLY	4G LTE ANTENNA	ETHERNET EXTENDER SWITCH COMBINATION UNIT	REMOTE ETHERNET POWER CONTROLLER SWITCH	24 VDC POWER SUPPLY	DATA SURGE SUPPRESSOR	DC TERMINAL BLOCK
	EA	EA	EA	EA	EA	EA	EA	EA	EA	
E-5	1	1	2	1	1	1	1	1	1	1

(N) – NOT A SEPARATE BID ITEM

ELECTRICAL SYSTEMS QUANTITIES

EQ-1

REVISED BY	DATE REVISED
MENG YANG	KIN Y. CHAN

CALCULATED-DESIGNED BY — CHECKED BY

CONSULTANT FUNCTIONAL SUPERVISOR — DANIEL K. YAU

STATE OF CALIFORNIA – DEPARTMENT OF TRANSPORTATION — Caltrans

LAST REVISION 07-30-20 — DATE PLOTTED => $DATE — TIME PLOTTED => $TIME