City of Placerville

Engineering Department
3101 Center Street, 3rd Floor
Placerville, CA 95667
(530) 642-5250 / (530) 642-5568 fax

ADDENDUM NUMBER 3
Dated: November 18th, 2019

to the
Notice to Bidders, Special Provision, Proposal and Contract Documents
for Construction of

UPPER BROADWAY BIKE LANES PROJECT
(INCLUDING UPPER BROADWAY PEDESTRIAN CONNECTION)
PROJECT NO. CML – 5015 (027 & 029)
CIP # 41508
and
UPPER BROADWAY STORM DRAIN REPLACEMENT PROJECT
CIP # 42004

This Addendum is issued to the Upper Broadway Bike Lanes Project (including Upper Broadway Pedestrian Connection) and Upper Broadway Storm Drain Replacement Project. Submit proposals for this work with the understanding and full consideration of this Addendum. The revisions declared in this Addendum are essential parts of the Contract.

Bidders are also directed to sign this Addendum as acknowledged, and attach the complete, signed Addendum to the Proposal.

The following changes are made to the Project Plans, Notice to Bidders, Special Provisions, Proposal, and Contract as a part of this addendum:

Plan Item No. 6: Replace sheet.

Regarding Plan Sheet S8 of the Upper Broadway Bike Lanes (including Pedestrian Connection) Project Plans. Replace Sheet S8 with the attached revised Sheet S8. Changes made on the revised Sheet S8 include:

- Revised spiral reinforcement of CIDH piles in the typical section and Section A-A.
- Added dimensions to the gap closures in the part plan at box culvert view.
- Added stud and call out to the piles in the part plan at box culvert view to show how the capping beam gets connected to the piles.

Plan Item No. 7: Replace sheet.

Regarding Plan Sheet C01 of the Upper Broadway Bike Lanes (including Pedestrian Connection) Project Plans Replace C01 of the Upper Broadway Bike Lanes (including Pedestrian Connection) Project Plans with the attached revised sheet. Changes have been

made to the sheet index and title block to describe the plan sheet changes described in this addendum.

Attachments:

- Revised Upper Broadway Bike Lanes (including Pedestrian Connection) Project Plan Sheets C01 & S8

This addendum has been prepared under the direction of the following registered Civil Engineer:

11/18/2019

Rebecca Neves, P.E. Date

REGISTERED PROFESSIONAL ENGINEER
REBECCA NEVES
No. 71920
Exp. 12/31/19
CIVIL
STATE OF CALIFORNIA

Acknowledgment:

I have reviewed the materials included in Addendum 3 to the Upper Broadway Bike Lanes Project (including Upper Broadway Pedestrian Connection) and Upper Broadway Storm Drain Replacement Project and understand the information provided is included as part of the Special Provisions, Proposal and Contract.

By:

Bidder's Signature Date

Bidder's Name (printed)

Name of Company

CITY OF PLACERVILLE, CALIFORNIA
ENGINEERING DEPARTMENT
PROJECT PLANS FOR:

UPPER BROADWAY BIKE LANES CIP# 41508
(INCLUDING UPPER BROADWAY PEDESTRIAN CONNECTION)

PROJECT No. CML - 5015 (027 & 029)

TO BE SUPPLEMENTED BY CALTRANS 2018 STANDARD PLANS, REVISED STANDARD PLANS, & SPECIFICATIONS (CURRENT TO SEPTEMBER 1ST, 2019)

UTILITY REPRESENTATIVES

	REPRESENTATIVE	TELEPHONE
GAS PG & E	JENNIFER DONOVAN	O: (530) 621-7228 C: (530) 383-0973
ELECTRICITY PG & E	JENNIFER DONOVAN	O: (530) 621-7228 C: (530) 383-0973
TELEPHONE AT&T	DARREN MORTENSEN	(530) 621-6926
WATER - WEST OF AIRPORT RD CITY OF PLACERVILLE	PUBLIC WORKS DEPT	(530) 642-5232
WATER - EAST OF AIRPORT RD EL DORADO IRRIGATION DISTRICT	PATRICK WILSON	(530) 642-4079
SEWER CITY OF PLACERVILLE	PUBLIC WORKS DEPT	(530) 642-5232
DRAINAGE CITY OF PLACERVILLE	PUBLIC WORKS DEPT	(530) 642-5232
U.S.A. U.S.A.		1-800-227-2600
FIRE FIRE DEPARTMENT	BRANDON MCKAY	(530) 644-9630
CABLE TV COMCAST	STEVE ABELIA	(916) 830-6757

REGISTERED PROFESSIONAL ENGINEER
JAMES W. FISHER
No. 73197
Exp. 12/31/20
CIVIL
STATE OF CALIFORNIA

DESIGNED UNDER THE DIRECTION OF

JAMES W. FISHER, PE, R.C.E. # 73197 — DATE 10/24/19

CITY OF PLACERVILLE

REBECCA NEVES, PE, CITY ENGINEER, R.C.E. # 71920 — DATE 10/24/19

PLAN SCALE: 1"=250'
0 125' 250' 500'
SCALE IN FEET

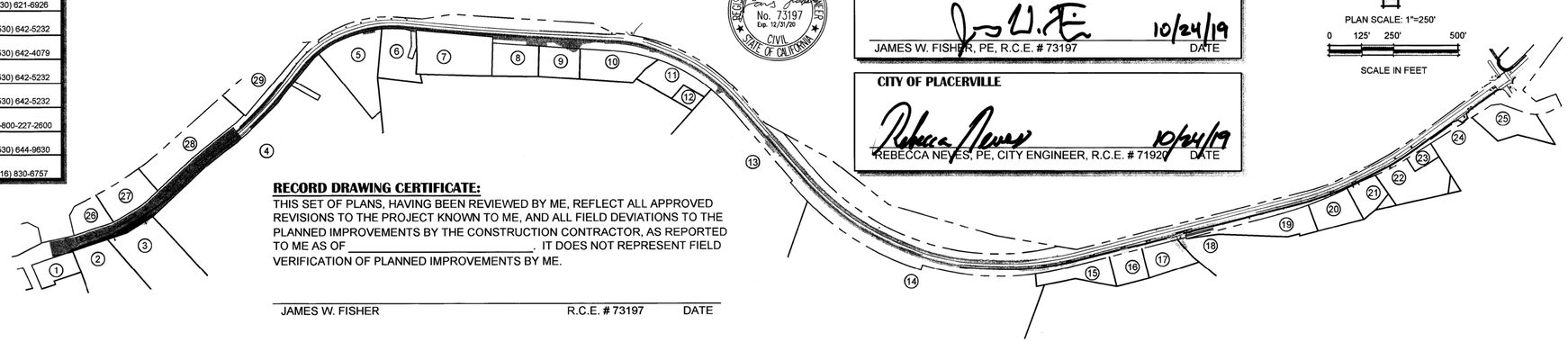

RECORD DRAWING CERTIFICATE:
THIS SET OF PLANS, HAVING BEEN REVIEWED BY ME, REFLECT ALL APPROVED REVISIONS TO THE PROJECT KNOWN TO ME, AND ALL FIELD DEVIATIONS TO THE PLANNED IMPROVEMENTS BY THE CONSTRUCTION CONTRACTOR, AS REPORTED TO ME AS OF _____. IT DOES NOT REPRESENT FIELD VERIFICATION OF PLANNED IMPROVEMENTS BY ME.

JAMES W. FISHER — R.C.E. # 73197 — DATE

REBECCA NEVES, PE, CITY ENGINEER — R.C.E. # 71920 — DATE

SHEET INDEX

C01 - TITLE SHEET
C02 - DETAILS & LEGEND
C03 - DETAILS
C04 - DETAILS
C05 - DRIVEWAY & RAMP DETAILS 1-9
C06 - DRIVEWAY & RAMP DETAILS 10-16
C07 - DRIVEWAY & RAMP DETAILS 17-20
C08 - DEMOLITION PLAN 10+00 - 31+50
C09 - DEMOLITION PLAN 31+50 - 53+50
C10 - DEMOLITION PLAN 53+50 - 75+81
C11 - PAVING PLAN 10+00 - 31+50
C12 - PAVING PLAN 31+50 - 53+50
C13 - PAVING PLAN 53+50 - 75+81
C14 - STRIPING & SIGNAGE PLAN 10+00 - 31+50
C15 - STRIPING & SIGNAGE PLAN 31+50 - 53+50
C16 - STRIPING & SIGNAGE PLAN 53+50 - 75+81
C17 - PLAN & SECTIONS 10+00 - 14+00
C18 - PLAN & SECTIONS 14+00 - 18+00
C19 - PLAN & SECTIONS 18+00 - 22+00
C20 - PLAN & SECTIONS 22+00 - 25+50
C21 - PLAN & SECTIONS 25+50 - 29+50
C22 - PLAN & SECTIONS 29+50 - 33+50
C23 - PLAN & SECTIONS 33+50 - 37+00
C24 - PLAN & SECTIONS 37+00 - 41+00
C25 - PLAN & SECTIONS 41+00 - 45+00
C26 - PLAN & SECTIONS 45+00 - 48+50
C27 - PLAN & SECTIONS 48+50 - 52+00
C28 - PLAN & SECTIONS 52+00 - 55+50
C29 - PLAN & SECTIONS 55+50 - 59+00
C30 - PLAN & SECTIONS 59+00 - 62+50
C31 - PLAN & SECTIONS 62+50 - 66+00
C32 - PLAN & SECTIONS 66+00 - 69+50
C33 - PLAN & SECTIONS 69+50 - 73+00
C34 - PLAN & SECTIONS 73+00 - 75+81
C35 - STORM DRAIN DETAILS & PLAN & PROFILE - SD-1
C36 - STORM DRAIN PLAN & PROFILE - SD-2 - SD-4
C37 - STORM DRAIN PLAN & PROFILE - SD-5 AND SD-6
C38 - TEMPORARY EROSION CONTROL PLAN 10+00 - 31+50
C39 - TEMPORARY EROSION CONTROL PLAN 31+50 - 53+50
C40 - TEMPORARY EROSION CONTROL PLAN 53+50 - 75+81
C41 - PERMANENT EROSION CONTROL PLAN 10+00 - 31+50
C42 - PERMANENT EROSION CONTROL PLAN 31+50 - 53+50
C43 - PERMANENT EROSION CONTROL PLAN 53+50 - 75+81
S01 - RW1 GENERAL PLAN
S02 - RW1 DETAILS
S03 - RW1 WALL DRAIN DETAILS
S04 - RW1 CABLE RAILING
S05 - RW2 GENERAL PLAN
S06 - RW2 DETAILS
S07 - RW3 GENERAL PLAN (2)
S08 - RW3 DETAILS (2)(3)
S09 - RW3 DETAILS
S10 - RW4 GENERAL PLAN
S11 - RW5 GENERAL PLAN
S12 - RW6 GENERAL PLAN
S13 - RW7 GENERAL PLAN
S14 - WALL DETAILS
S15 - WALL DETAILS

S9A - RW3 DETAILS No. 3 (2)

VICINITY MAP

NOT TO SCALE

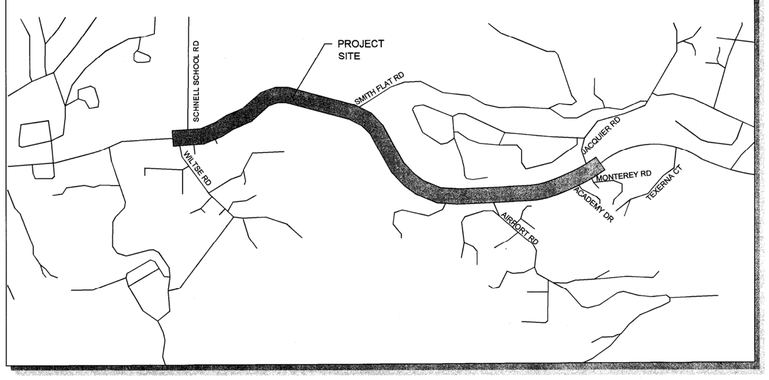

1. APN: 004-191-48
ADDRESS: 1390 BROADWAY
OWNER: ESPINOZA PROPERTIES II LLC

2. APN: 004-191-49
ADDRESS: 1400 BROADWAY
OWNER: J&V ACCETTURA

3. APN: 004-191-50
ADDRESS: 1412 BROADWAY
OWNER: JAMES AND SUSAN OBRIEN

4. APN: 004-201-22
ADDRESS: 1426 BROADWAY
OWNER: KAPRE PROPERTIES INC

5. APN: 004-201-14
ADDRESS: 1486 BROADWAY
OWNER: KAPRE PROPERTIES INC

6. APN: 004-201-12
ADDRESS: 1500 BROADWAY
OWNER: VINOD & KUSUMBEN PATEL

7. APN: 004-201-24
ADDRESS: 1540 BROADWAY
OWNER: RICHARD ROOD

8. APN: 049-100-14
ADDRESS: 1560 BROADWAY
OWNER: KULDIP SINGH

9. APN: 049-100-15
ADDRESS: 1600 BROADWAY
OWNER: KULDIP SINGH

10. APN: 049-100-16
ADDRESS: 1610 BROADWAY
OWNER: FAM LP NAHIBERUTI

11. APN: 049-170-13
ADDRESS:1624 BROADWAY
OWNER: CHRISTIAN MCFADDEN

12. APN: 049-170-12
ADDRESS: 1622 BROADWAY
OWNER: MARK & GINA HALE

13. APN: 049-170-07
ADDRESS: 1676 BROADWAY
OWNER: HARISH & SIMRAN PATEL

14. APN: 049-170-15
ADDRESS: 1700 BROADWAY
OWNER: BARRY WILKINSON

15. APN: 049-190-25
ADDRESS: 1750 BROADWAY
OWNER: JERMSTAD INVESTMENTS

16. APN: 049-190-24
ADDRESS: 1770 BROADWAY
OWNER: LESTER & GAIL RUSSELL

17. APN: 049-190-23
ADDRESS: 1778 BROADWAY
OWNER: RICHARD & SHELLIA SCHERER

18. APN: 049-190-06
ADDRESS: 3025 AIRPORT RD
OWNER: RICK & AMY NICHELINI

19. APN: 049-350-29
ADDRESS: 1850 BROADWAY
OWNER:BENJAMIN RENTFROW

20. APN: 049-350-30
ADDRESS: 1864 BROADWAY
OWNER: NORTHERN CA CONF SDA

21. APN: 049-350-19
ADDRESS: 1868 BROADWAY
OWNER: ROMAN CATHOLIC BISHOP OF SACRAMENTO

22. APN: 049-350-21
ADDRESS: 1866 BROADWAY
OWNER: AURELIANO & LORENA CEJA

23. APN: 049-350-22
ADDRESS: 1882 BROADWAY
OWNER: STEPHEN TOLENTINO

24. APN: 048-380-10
ADDRESS: 1900 BROADWAY
OWNER: SEVENTH DAY ADVENTISTS

25. APN: 049-350-23
ADDRESS: UNKNOWN
OWNER: GP FILLMAN FOUNDATION

26. APN: 002-261-34
ADDRESS: 1405 BROADWAY
OWNER: GARY PEREZ

27. APN: 002-261-35
ADDRESS: 1415 BROADWAY
OWNER: LMTD PARTNERSHIP

28. APN: 002-261-36
ADDRESS: 1449 BROADWAY
OWNER: SANTOS & ALBA ORTIZ

29. APN: 002-261-38
ADDRESS: 1469 BROADWAY
OWNER: CHARLES OLSON

GENERAL NOTES:

OWNER OF RECORD
CITY OF PLACERVILLE
3101 CENTER ST,
PLACERVILLE, CALIFORNIA 95667
(530) 621-2489

GEOTECHNICAL ENGINEERING REPORT
TITLE: GEOTECHNICAL REPORT
UPPER BROADWAY BIKE LANES
CITY OF PLACERVILLE, CALIFORNIA
DATE: OCTOBER 2019
WORK ORDER: P15055
PREPARED BY: WRECO

BENCH MARK
SEE SHEETS C17 - C34 FOR BENCHMARK INFORMATION.

BASIS OF BEARING
HORIZONTAL DATUM: NAD83(2007)
CALIFORNIA ZONE 2, U.S. SURVEY FEET
VERTICAL DATUM: NAVD88
PIDS OF GEODETIC CONTROL POINTS HELD: AC9231, AC9233, DH6459

GRID TO GROUND CONVERSION: GRID / 0.9984396 = GROUND

NO.	REVISION DESCRIPTION	CHECKED BY	DATE
2	ADDENDUM #3 - SHT S8	JWF	11/18/19
1	ADDENDUM #2 - SHTS S7, S8, S9A	JWF	11/15/19

DRAWING SCALE
HOR. SCALE: AS NOTED
VERT. SCALE: N/A

R.E.Y. ENGINEERS, INC.
Civil Engineers | Land Surveyors | LIDAR
905 Sutter Street, Suite 200 Folsom, CA 95630
Phone: (916) 366-3040 Fax: (916) 366-3303

UPPER BROADWAY BIKE LANES
CIP# 41508
TITLE SHEET
CITY OF PLACERVILLE CALIFORNIA

DRAWING INFO
DATE: 10/24/2019
DRAFTER: KRVOMCVR
DESIGNER: CASB
REVIEWER: JWF

PROJECT NO. 6884.003
SHEET NO. C01 OF C43

R:\6884 - City of Placerville\003 - Upper Broadway Bike Lanes\10 - CAD Drawings\Improvement Plans\6884.003 TITLE SHEET.dwg Oct 24, 2019 - 11:18am, khoover

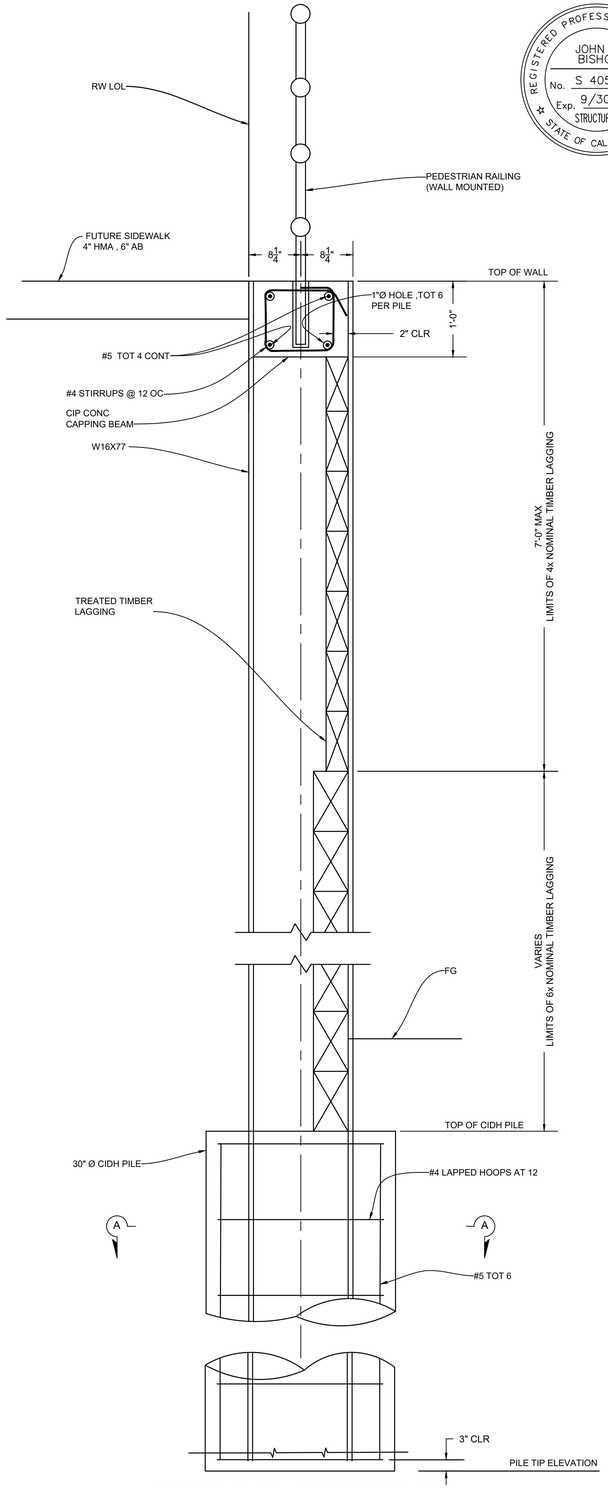

TYPICAL SECTION

0 1/2' 1' 2'

REGISTERED PROFESSIONAL ENGINEER
JOHN S. BISHOP
No. S 4059
Exp. 9/30/21
STRUCTURAL
STATE OF CALIFORNIA

John Bishop

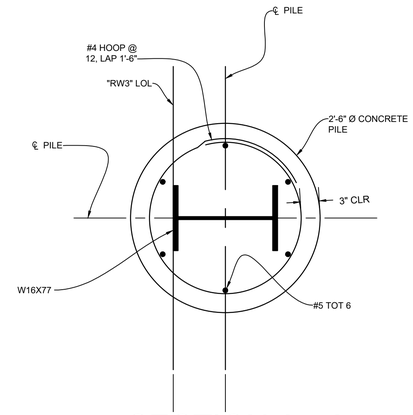

SECTION A - A

0 1/2' 1' 2'

DESIGN NOTES:

DESIGN:	AASHTO LRFD Bridge Design Specifications, 4th Edition with California Amendments
LS:	2 foot surcharge on level ground surface
PT:	50 pound per foot transverse force applied at He = 32"
SEISMIC:	k_h= 0.2 k_v= 0.0
SOIL:	Φ = 43° γ = 120 pcf
TREATED TIMBER LAGGING:	Adjust stresses for moisture content greater than 19% Fb = 1200 psi Fv = 170 psi F = 625 psi
CIDH REINFORCED CONCRETE :	f'c = 3,600 psi fy = 60,000 psi
STRUCTURAL STEEL:	ASTM A709 or ASTM A36 Fy = 36,000 psi

LOAD COMBINATIONS AND LIMIT STATES:

Service I	Q = 1.00DC+1.00EV+1.00EH+1.00LS
Strength I	Q = α DC+ β̇EV+ηEH+1.75LS
Extreme I	Q = 1.00DC+1.00EV+1.00EH+1.00EQD+1.00EQE
Extreme II	Q = 1.00DC+1.00EV+1.00EH+1.00CT

Where:

Q:	Force Effects
α:	1.25 or 0.90, Whichever Controls Design
β̇:	1.35 or 1.00, Whichever Controls Design
η:	1.50 or 0.90, Whichever Controls Design
DC:	Dead Load of Structure Components
EH:	Horizontal Earth Pressure
EV:	Vertical Earth Pressure from Earth Weight
LS:	Live Load Surcharge
EQE:	Seismic Earth Pressure
EQD:	Soil and Structural and Nonstructural Components Inertia
PT:	Pedestrian Handrail Force

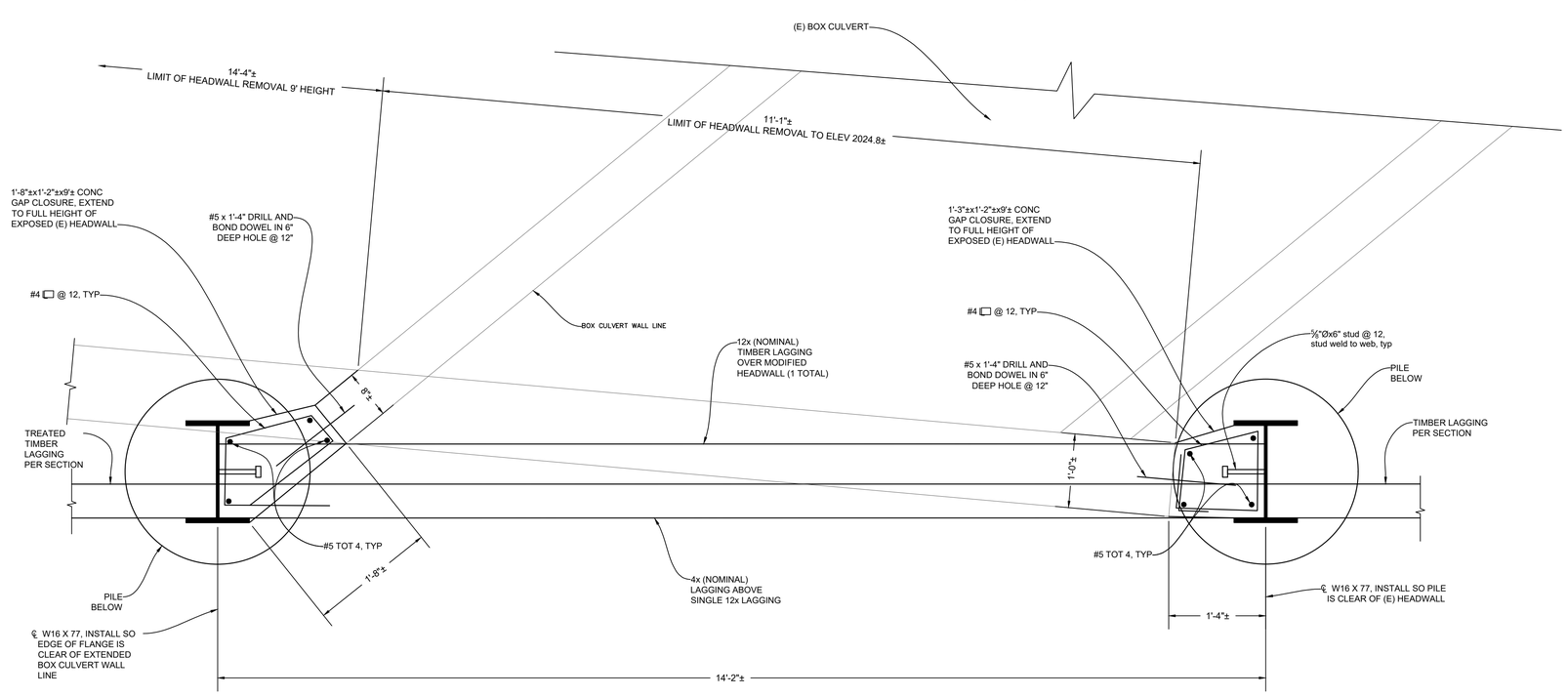

PART PLAN AT BOX CULVERT

0 1/2' 1' 2'

NO.	REVISION DESCRIPTION	CHECKED BY	DATE
3	REPLACE SHEET S8 DATED 11/15/2019 WITH THIS SHEET DATED 11/18/2019	JWF	11/18/19
2	REPLACE SHEET S8 DATED 10/17/2019 WITH THIS SHEET	JWF	11/15/19

DRAWING SCALE
HOR. SCALE: 1" = 20'
VERT. SCALE: 1" = 4'

wreco
1243 ALPINE ROAD, SUITE 108
WALNUT CREEK, CA 94596
PH (925) 941-0017 FX (925) 941-0018

UPPER BROADWAY BIKE LANES

CIP# 4150S
RW3 DETAILS NO. 1

CITY OF PLACERVILLE CALIFORNIA

DRAWING INFO
DATE: 11-18-2019
DRAFTER: TJM
DESIGNER: JB
REVIEWER: DK

PROJECT NO. 6884.003

SHEET NO. S8 OF S15

\\wrecowc02\public\wc2\public\Projects\Y2015\P15055 Upper Broadway Bike Lanes\Dwg\bs\WRECO - 3D BASE 20191115_jsbreve.dwg Nov 18, 2019 - 2:02pm, Thomas_Madoyog